Micro System

MC260,MC270

all versions

Service
Service
Service

Service Manual

TABLE OF CONTENTS

Handling chip components 1-1
Technical specification....2-1
Service tools 2-1
Service measurement setup 2-2
Connections and controls 3-1
Instructions for use ....3-2..3-7

Disassembly diagram 4-1
Service Test Program 4-2
Pin description of ICs....4-3..4-4
Set block diagram....5-1
Set wiring diagram....5-2

LED BOARD
circuit diagram 6-1
layout diagram 6-1

TUNER BOARD (ECO6 cenelec)
circuit diagram 7-1
layout diagram 7-2
tuner adjustment table 7-2

TUNER BOARD (ECO6 non cenelec)
circuit diagram 7-3
layout diagram 7-4
tuner adjustment table 7-4

ETF 8 TAPE DECK MODULE
circuit diagram 8-1
layout diagram 8-2
tape deck adjustment....8-3
tape deck wiring diagram....8-4

CD MODULE (CD99-DA11)
circuit diagram ....9-1..9-3
layout diagram 9-2

POWER BOARD
circuit diagram 10-1
layout diagram 10-1

FRONT BOARD
circuit diagram 11-1
layout diagram ....11-2..11-3

COMBI BOARD
circuit diagram. ....12-1..12-3
layout diagram ....12-4..12-5
circuit diagram (for /22/25)....12-6..12-8
layout diagram (for /22/25) ....12-9..12-10

Exploded view (main set) ....13-1..13-2
Mechanical service partslist....13-2
Exploded view diagram (tape deck)....13-3
Electrical service partslist 14-1

Electrical partslist....14-2..14-17
Electrical partslist (for /22/25) ....14-18..14-23
(Not service parts,only for referrence)

CLASS 1
LASER PRODUCT

© Copyright 2004 Philips Consumer Electronics B.V. Eindhoven, The Netherlands
All rights reserved. No part of this publication may be reproduced, stored in a retrieval system or transmitted, in any form or by any means, electronic, mechanical, photocopying, or otherwise without the prior permission of Philips.

Published by LX 0416 Service Audio Printed in The Netherlands Subject to modification

GB 3140 785 32940

version1.0

PHILIPS

HANDLING CHIP COMPONENTS

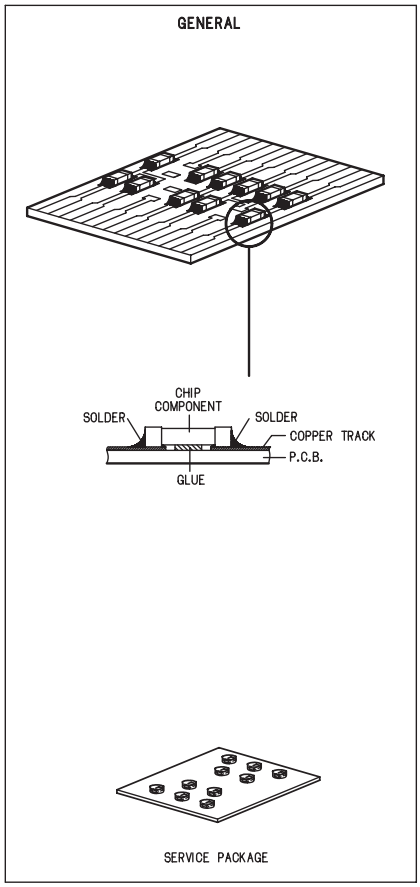

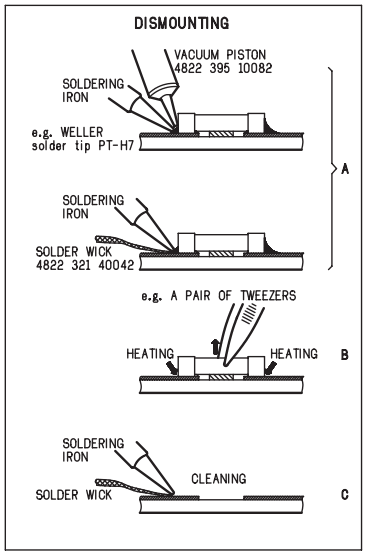

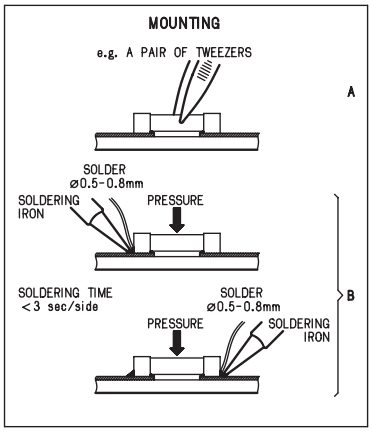

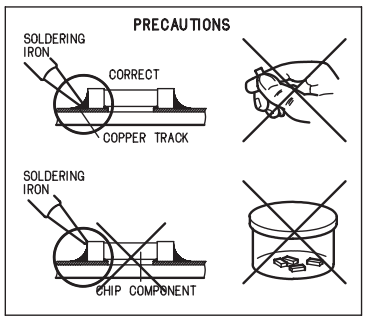

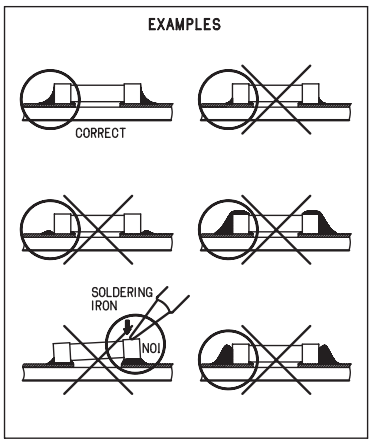

(GB) WARNING
All ICs and many other semiconductors are susceptible to electrostatic discharges (ESD). Careless handling during repair can reduce life drastically.
When repairing, make sure that you are connected with the same potential as the mass of the set via a wristband with resistance. Keep components and tools at this potential.

ESD

(F) ATTENTION
Tous les IC et beaucoup d«autres semi-conducteurs sont sensibles aux d charges statiques (ESD). Leur long vite pourrait tre consid rablement court e par le fait qu«aucune pr caution n st prise leur manipulation.
Lors de r parations, s«assurer de bien tre reli au m me potentiel que la masse de l«appareil et enfileer le bracelet serti d«une r sistance de s curit .
Veiller ce que les composants ainsi que les outils que l«on utilise soient galement ce potentiel.

(D) WARNUNG
Alle ICs und viele andere Halbleiter sind empfindlich gegen ber elektrostatischen Entladungen (ESD).
Unsorgf ltige Behandlung im Reparaturfall kann die Lebensdauer drastisch reduzieren.
Sorgen Sie daf r, da§ Sie im Reparaturfall ber ein Puls-armband mit Widerstand mit dem Massepotential des Ger tes verbunden sind.
Halten Sie Bauteile und Hilfsmittel ebenfalls auf diesem Potential.

(NL) WAARSCHUWING
Alle IC«s en vele andere halfgeleiders zijn gevoelig voor electrostatische ontladingen (ESD).
Onzorgvuldig behandelen tijdens reparatie kan de levensduur drastisch doen vermindern. Zorg ervoor dat u tijdens reparatie via een polsband met weerstand verbonden bent met hetzelfde potentiaal als de massa van het apparaat.
Houd componenten en hulpmiddelen ook op ditzelfde potentiaal.

(I) AVVERTIMENTO
Tutti IC e parecchi semi-conduttori sono sensibili alle scariche statiche (ESD).
La loro longevit potrebbe essere fortemente ridatta in caso di non osservazione della pi grande cauzione alla loro manipolazione. Durante le riparationi occorre quindi essere collegato allo stesso potenziale che quello della massa del pparecchio tramite un braccialetto a resistenza.
Assicurarsi che i componenti e anche gli utensili con quali si lavora siano anche a questo potenziale.

SAFETY

(GB)
Safety regulations require that the set be restored to its original condition and that parts which are identical with those specified be used.
Safety components are marked by the symbol ⚠

(F)
Les normes de s curit exigent que l'appareil soit remis l' tat d'origine et que soient utilis es les pi ces de rechange identiques celles sp cifi es.
Les composants de s curit sont marqu s ⚠

(D)
Bei jeder Reparatur sind die geltenden Sicherheitsvor-schriften zu beachten. Der Originalzustand des Ger tes darf nicht ver ndert werden. F r Reparaturen sind Original-ersatzteile zu verwenden.
Sicherheitsbauteile sind durch das Symbol ⚠ markiert.

(NL)
Veiligheidsbepalingen vereisen, dat het apparaat in zijn oorspronkeliijke toestand wordt teruggebracht en dat onderdelen, identiek aan de gespecificeerde, worden toegepast.
De Veiligheidsonderdelen zijn aangeduid met het symbool ⚠

(I)
Le norme di sicurezza estigono che l«apparecchio venga rimesso nelle condizioni originali e che siano utilizzati i pezzi di ricambiago identici a quelli specificati.
Componenty di sicurezza sono marcati con ⚠

CLASS 1
LASER PRODUCT

DANGER: Invisible laser radiation when open.
AVOID DIRECT EXPOSURE TO BEAM.

(S) Varning !
Osynlig laserstr lning n r apparaten r ppnad och sp rren r urkopplad. Betrakta ej str len.

(DK) Advarsel !
Usynlig laserstr ling ved bning n r sikkerhedsafbrydere er ude af funktion. Undg udsaettelse for str ling.

(FIN) Varoitus !
Avatussa laitteessa ja suojalukituksen ohitettaessa olet alttiina n kym tt m lle laseris teilylle. l katso s teeseen !

(GB)
After servicing and before returning the set to customer perform a leakage current measurement test from all exposed metal parts to earth ground, to assure no shock hazard exists.
The leakage current must not exceed 0.5mA.

(F)
"Pour votre s curite, ces documents doivent tre utilis s par des sp cialistes agr s, seuls habilit s r parer votre appareil en panne".

TECHNICAL SPECIFICATIONS

GENERAL

Mains voltage	-/25	:	240 V
	-/37	:	120 V
	-/21/21M	:	120 / 230 V
	-/22/30/33	:	230 V
Mains frequency	-/22/25/30/33	:	50 Hz
	-/21/21M	:	50 / 60 Hz
	-/37	:	60 Hz
Battery	remote	:	3 V (R6 x 2)
Power consumption	normal	:	60 W
	Standby	:	3 W
Dimension (W x H x D)		:	140 x 231 x 280 mm
Weight		:	6.7 Kg

AMPLIFIER

Output power	mains	:	2 x 8 W
Speaker impedance		:	2 x 8 ohm
Frequency response		:	100 Hz - 10 kHz (±4dB)

TUNER - FM SECTION

Tuning range		:	87.5 - 108 MHz
IF frequency		:	10.7 MHz ± 0.02 MHz
Sensitivity		:	16 dBf at 26dB S/N
Selectivity	300kHz	:	55 dB
IF suppression		:	85 dB
Image suppression		:	40 dB
Channel separation	1kHz	:	28 dB

TUNER - AM SECTION

Tuning range	MW	:	531 - 1602 kHz
	-/37	:	530 - 1700 kHz
Tuning range	LW	:	153 - 279 kHz
IF frequency		:	450 kHz ± 1 kHz
Sensitivity	MW	:	≤ 3.5 mV/m at 26dB S/N
	LW	:	≤ 4.2 mV/m
Selectivity	MW	:	< 22 dB
	LW	:	< 35 dB
IF rejection	MW	:	< 64 dB
Spurious rejection ratio	MW	:	< 58 dB
	LW	:	< 51 dB
Image rejection ratio	MW	:	< 40 dB
	LW	:	< 47 dB

AUDIO CASSETTE RECORDER

Frequency response		:	80 - 12500 Hz
Wow & flutter		:	0.4 % (DIN)
Tape speed		:	4.76 cm/s ± 2 %
Channel difference	1kHz	:	0 dB
S/N ratio (unw.)	Ferro	:	47 dB
	Chrome	:	50 dB
S/N ratio (wght.)	Ferro	:	52 dB
	Chrome	:	56 dB

COMPACT DISC

Frequency response		:	20Hz – 20kHz within 1.5dB
S/N ratio (unw.)		:	> 85 dB
S/N ratio (A-wght.)		:	> 90 dB
THD+N	1 kHz	:	> 72 dB
Channel crosstalk		:	> 50 dB
Channel unbalance		:	< ±1 dB

SERVICE TOOLS

TORX T10 screwdriver with shaftlength 150mm.....4822 395 50423
TORX screwdriver set SBC 163.....4822 295 50145

Audio signal disc SBC 429.....4822 397 30184
Playability test disc SBC 444.....4822 397 30245
Test disc 5 (disc without errors) +
Test disc 5A (disc with dropout errors, black spots and fingerprints)
SBC 426/426A.....4822 397 30096
Burn in test disc (65 min. 1kHz signal at -30 dB level without “pause”).....4822 397 30155

Universal test cassette Fe SBC 420.....4822 397 30071

AVAILABLE ESD PROTECTION EQUIPMENT

anti-static table mat	large 1200x650x1.25mm	4822 466 10953
	small 600x650x1.25mm	4822 466 10958
anti-static wristband		4822 395 10223
connection box (3 press stud connections, 1MΩ)		4822 320 11307
extendible cable (2m, 2MΩ, to connect wristband to connection box)		4822 320 11305
connecting cable (3m, 2MΩ, to connect table mat to connection box)		4822 320 11306
earth cable (1MΩ, to connect any product to mat or to connection box)		4822 320 11308
KIT ESD3 (combining all 6 prior products - small table mat)		4822 310 10671
wristband tester		4822 344 13999

SERVICE MEASUREMENT

Tuner FW

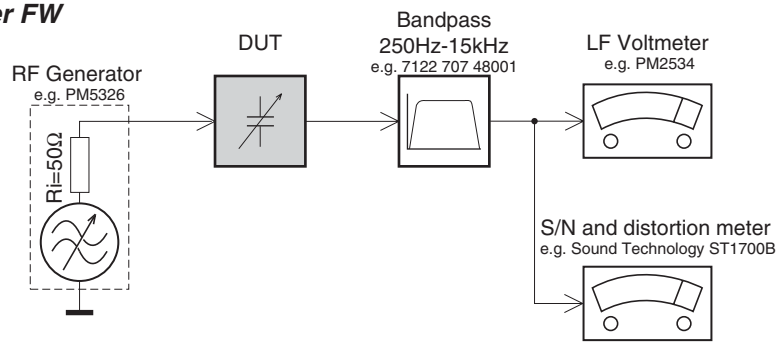

Use a bandpass filter to eliminate hum (50Hz, 100Hz) and disturbance from the pilottone (19kHz, 38kHz).

Tuner AM (MW,LW)

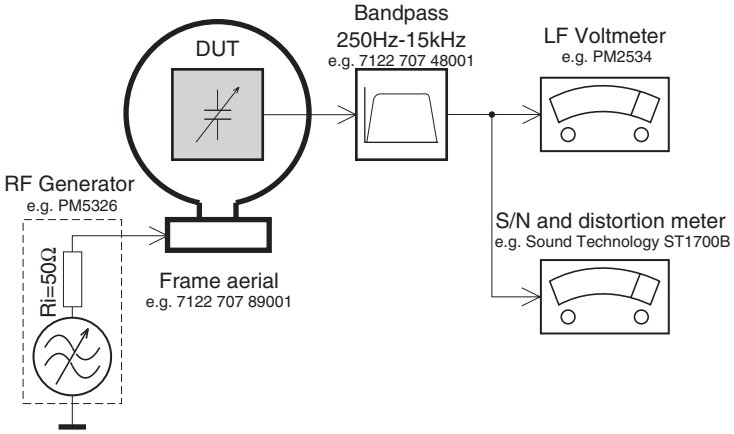

To avoid atmospheric interference all AM-measurements have to be carried out in a Faraday´s cage.
Use a bandpass filter (or at least a high pass filter with 250kHz) to eliminate hum (50Hz, 100Hz).

CD

Use Audio Signal Disc SBC429 4822 397 30184
(replaces test disc 3)

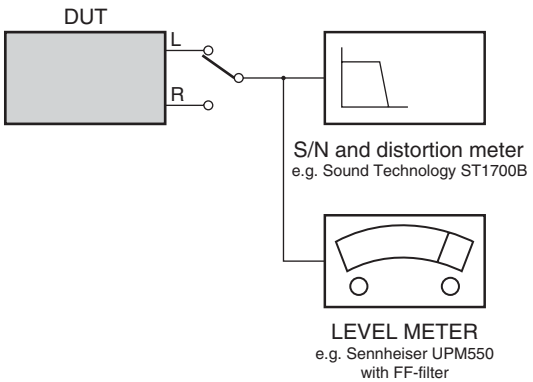

RECORDER

Use Universal Test Cassette **Fe** SBC420 4822 397 30071

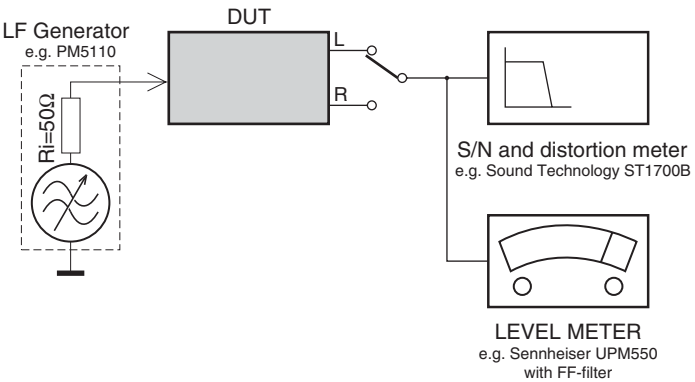

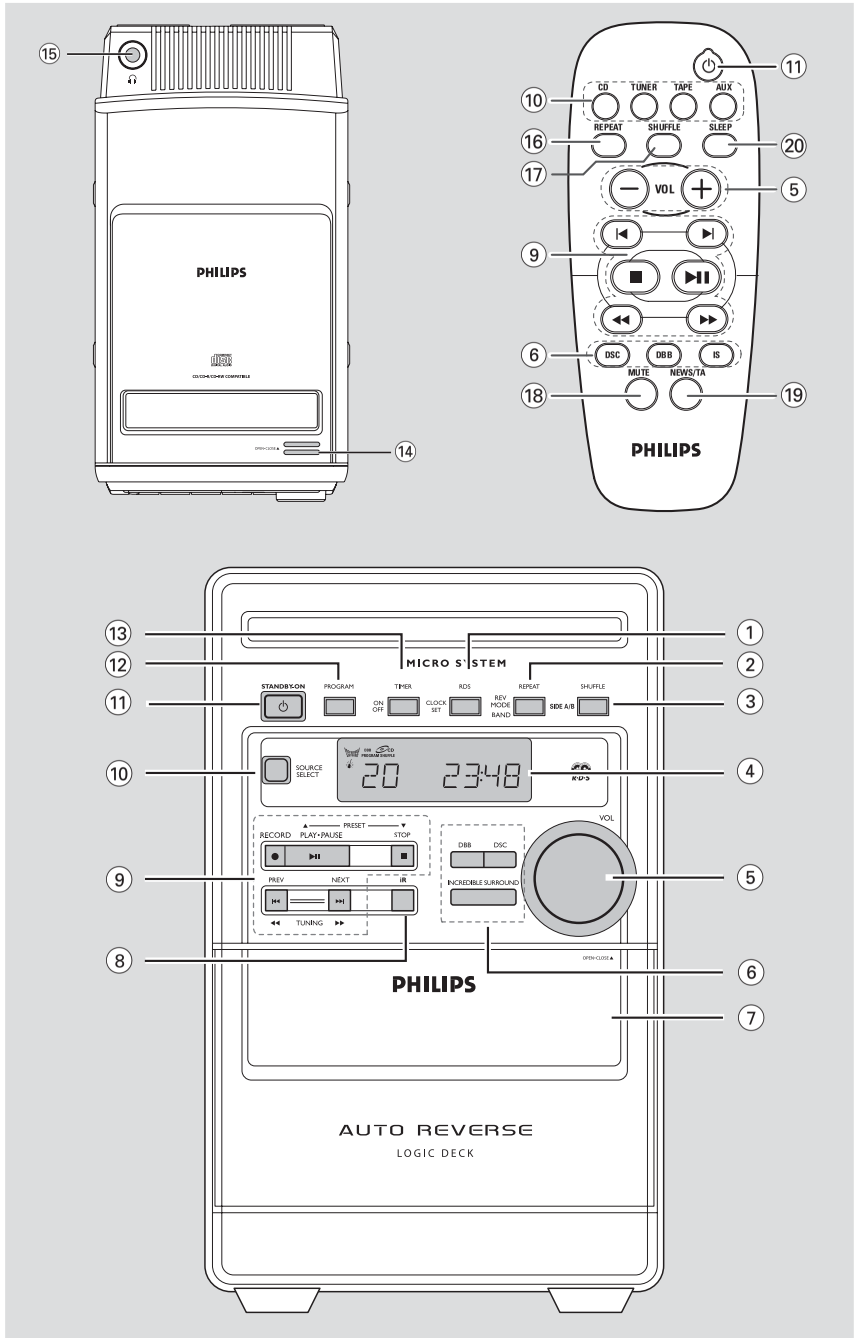

Controls *(illustrations on page 3)*

Controls on the system and remote control

① **CLOCK/ RDS**
for TUNER ..... displays RDS information.
for CLOCK ..... sets the clock function.
for TAPE ..... shows tape counter in recording mode .

② **REPEAT/ REV MODE/ BAND**
for CD ..... repeats a track/CD programme/ entire CD .
for TAPE ..... selects tape reverse modes.
for TUNER ..... selects waveband.

③ **SHUFFLE/ SIDE A/B**
for CD ..... plays CD tracks in random order .
for TAPE ..... switches tape direction.

④ **Display**
– *shows the status of the system .*

⑤ **VOLUME (VOL −/+)**
– *adjusts the volume level.*
– *on the system only - adjusts the hour and minutes for the clock/timer functions.*

⑥ **INTERACTIVE SOUND controls:**
DBB ..... *(Dynamic Bass Boost) enhances the bass.*
DSC ..... *(Digital Sound Control) selects sound characteristics: CLASSIC/ ROCK/JAZZ/POP.*
INCREDIBLE SURR. (IS) ..... *creates a super-enhanced stereo effect.*

⑦ **OPEN•CLOSE**
– *opens tape compartment.*

⑧ **iR SENSOR**
– *infrared sensor for remote control .*

⑨ **Mode Selection**
STOP ■ ..... *stops CD playback or erase a CD programme.*
..... *stops tape playback/recording.*
PLAY•PAUSE ▶II
..... *starts or interrupts CD playback.*
..... *starts tape playback.*
..... *(on the remote control only) during tape playback, switches tape direction.*
PRESET ▲▼
(|◀, ▶|) ..... selects a preset radio station.
PREV |◀◀ / NEXT ▶▶|
(|◀, ▶|) ..... skips to the beginning of a current track/previous/ subsequent track.
(◀◀, ▶▶) ..... fast searches back and forward within a track/CD.
..... *fast rewind/wind tape .*
TUNING ◀◀ ▶▶
(◀◀, ▶▶) ..... tunes to radio stations.
RECORD ..... *starts recording.*

⑩ **SOURCE SELECT**
– *selects the respective sound source for CD/ TUNER/ TAPE /AUX.*
– *switches on the system .*

⑪ **STANDBY ON ⏻**
– *switches the system to standby/on.*
– *on the remote control only - switches the system to standby.*

⑫ **PROGRAM**
for CD ..... programmes tracks and reviews the programme.
for TUNER ..... programmes tuner stations manually or automatically .

⑬ **TIMER ON•OFF**
– *activates/deactivates or sets the timer function.*

⑭ **OPEN•CLOSE**
– *opens/closes the CD door .*

⑮ **🎧**
– *connect headphones.*

⑯ **REPEAT**
– *repeats a track/ CD programme/ entire CD .*

⑰ **SHUFFLE**
– *plays CD tracks in random order .*

⑱ **MUTE**
– *interrupts and resumes sound reproduction.*

⑲ **NEWS/TA**
– *activates RDS news and Traffic Announcement .*

⑳ **SLEEP**
– *activates/deactivates or selects the sleeper time .*

Notes for remote control:
– First select the source you wish to control by pressing one of the source select keys on the remote control (for example CD, TUNER).
– Then select the desired function (for example ▶, |◀, ▶|).

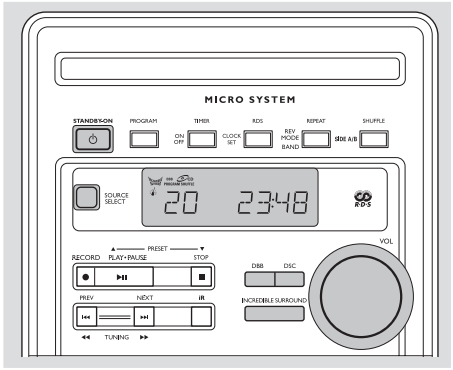

IMPORTANT!
Before you operate the system, complete the preparation procedures.

Switching the system on

Press ⏻ **STANDBY ON** *or* **SELECT SOURCE**.

The system will switch to the last selected source .

Press **CD**, **TUNER**, **TAPE** *or* **AUX** *on the remote control.*

The system will switch to the selected source.

To switch the system to standby mode

Press ⏻ **STANDBY ON** *on the system or remote control .*

If in recording mode , press **STOP** ■ *first.*

The volume level, interactive sound settings, last selected source and tuner presets will be retained in the player's memory.

Power-saving automatic standby

As a power-saving feature , the system automatically switches to standby 15 minutes after a tape or CD has reached the end and no control is operated.

Adjusting volume and sound

1 *Turn the* **VOLUME** *control anti-clockwise to decrease or clockwise to increase volume on the system (or press* **VOL** −/+ *on the remote control).*

Display shows the volume level VOL *and a number from 0-32.*

2 *Press* **DSC** *repeatedly to select the desired sound effect:* **CLASSIC** *(no indication)/* **ROCK** *(**) /* **JAZZ** *(**) /* **POP** *(**).*

3 *Press* **DBB** *to switch bass enhancement on or off.*

Display shows: DBB *if the DBB is activated.*

4 *Press* **INCREDIBLE SURR.** *(***IS** *on the remote control) to switch the surround sound effect on or off.*

Display shows: INCREDIBLE SURROUND *if activated.*

Note:

– The effect of INCREDIBLE SURROUND may vary with different types of music.

5 *Press* **MUTE** *on the remote control to interrupt sound reproduction instantly.*

Playback will continue without sound and the display shows MUTE.

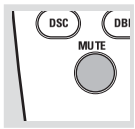

To activate sound reproduction you can:

– *press* **MUTE** *again;*
– *adjust the volume controls;*
– *change source .*

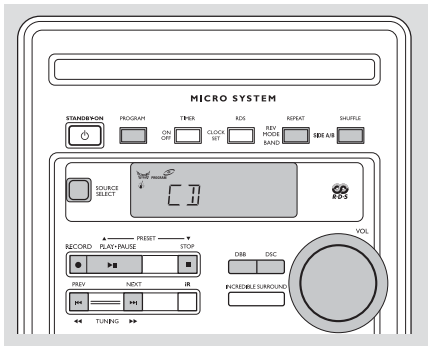

IMPORTANT!
The lens of the CD player should never be touched.

Playing a disc

This CD player plays Audio Discs including CD - Recordables and CD-Rewritables.

CD-ROM, CD-I , CD V, VCD , DVD or computer CDs, however, are not possible.

1 *Select* **CD** *source .*

2 *Press* **OPEN•CLOSE** *on the top of the system to open the CD compartment.*

OPEN is displayed when you open the CD compartment.

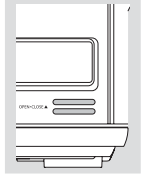

3 *Insert a disc with the printed side facing up and press down on* **OPEN•CLOSE** *to close the CD door .*

READ is displayed as the CD player scans the contents of a disc , and then the total number of tracks and playing time are shown.

4 *Press* **PLAY•PAUSE** ▶II *(on the remote control* ▶II*) to start playback.*

Current track number and elapsed playing time of the track are displayed during disc playback.

5 *To interrupt playback press* **PLAY•PAUSE** ▶II *(on the remote control* ▶II*). Press* **PLAY•PAUSE** ▶II *(on the remote control* ▶II*) again to resume play.*

The display freezes and the elapsed playing time flashes when playback is interrupted.

6 *To stop disc playback, press* **STOP** ■.

Note: CD play will also stop when;
– the CD door is opened.
– the disc has reached the end.
– you select another source:TAPE,TUNER, AUX or standby.

Selecting a different track

Press **PREV** |◀◀ *or* **NEXT** ▶▶| *(on the remote control* |◀ *or* ▶|*) once or repeatedly until the desired track number appears in the display.*

If you have selected a track number shortly after loading a disc or in the PAUSE position, you will need to press **PLAY•PAUSE** ▶II *(on the remote control* ▶II*) to start playback.*

Finding a passage within a track

1 *Press and hold down on* **PREV** |◀◀ *or* **NEXT** ▶▶| *(on the remote control* ◀◀ *or* ▶▶ *).*

The disc is played at high speed and low volume .

2 *When you recognise the passage you want, release* **PREV** |◀◀ *or* **NEXT** ▶▶| *(on the remote control* ◀◀ *or* ▶▶ *).*

Normal playback continues.

Note:

– During a disc programme or if SHUFFLE/ REPEAT active, searching is only possible within the same track.

CD Operation

Different play modes: SHUFFLE and REPEAT

You can select and change the various play modes before or during playback. The play modes can also be combined with PROGRAMME.

SHUFFLE ..... *tracks of the entire disc/ programme are played in random order*

SHUFFLE *and* REPEAT ALL *...to repeat the entire disc/ programme continuously in random order*

REPEAT ALL ... *repeats the entire disc/ programme*

REPEAT ..... *plays the current track continuously*

1 *To select your play mode , press the* **SHUFFLE** *or* **REPEAT** *button before or during playback until the display shows the desired function.*

2 *Press* **PLAY•PAUSE ▶II** *(on the remote control* **▶II***) to start playback if in the STOP position.*

If you have selected SHUFFLE, playback starts automatically.

3 *To return to normal playback, press the respective* **SHUFFLE** *or* **REPEAT** *button until the various SHUFFLE/ REPEAT modes are no longer displayed.*

You can also press **STOP ■** *to cancel your play mode .*

Programming track numbers

Programme in the STOP position to select and store your disc tracks in the desired sequence . If you like, store any track more than once . Up to 20 tracks can be stored in the memory.

1 *Press* **PROGRAM** *to enter the programming mode .*

A track number is shown and **PROGRAM** *flashes.*

2 *Use the* **PREV ⏮** *or* **NEXT ⏭** *(on the remote control ⏮ or ⏭) to select your desired track number.*

3 *Press* **PROGRAM** *to confirm the track number to be stored.*

The number of tracks programmed and total playing time of the programme is shown briefly, then the selected track and PROG.

4 *Repeat steps* **2-3** *to select and store all desired tracks.*

FULL is displayed if you attempt to programme more than 20 tracks.

5 *To start playback of your disc programme, press* **PLAY•PAUSE ▶II** *(on the remote control* **▶II***).*

Reviewing the programme

In STOP mode , press and hold down **PROGRAM** *for a while until the display shows all your stored track numbers in sequence .*

Erasing the programme

You can erase the programme by:

pressing **STOP ■** *once in the STOP mode;*
pressing **STOP ■** *twice during playback;*
opening the CD compartment;

PROGRAM *disappears from the display.*

Radio Reception

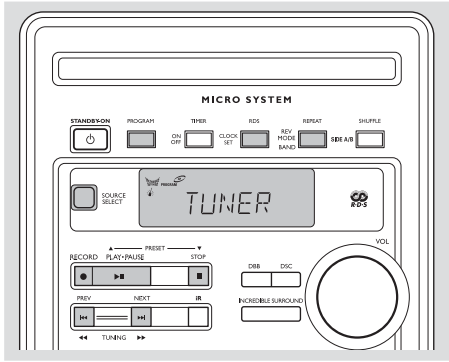

Tuning to radio stations

1 *Select* **TUNER** *source .*

TUNER is displayed briefly.

2 *Press* **BAND** *once or more to select your waveband.*

3 *Press down on* **TUNING ◀◀** *or* **▶▶** *and release button.*

The radio automatically tunes to a station with sufficient reception. Display indication during automatic tuning: SEARCH.

If a FM station is received in stereo , **STEREO** *is shown.*

4 *Repeat step* **3** *if necessary until you find the desired station.*

To tune to a weak station, press **TUNING ◀◀** *or* **▶▶** *briefly and repeatedly until you have found optimal reception.*

Programming radio stations

You can store up to a total of 40 radio stations in the memory.

Automatic programming

Automatic programming will start with a chosen preset number. From this preset number upwards, former programmed radio stations will be overridden. The system will only programme stations which are not in the memory already.

1 *Press* **PRESET ▲** *or* **▼** *(on the remote control ⏮ or ⏭) to select the preset number where programming should start.*

Note:
– If no preset number is selected, default is preset (1) and all your presets will be overridden.

2 *Press* **PROGRAM** *for more than 2 seconds to activate programming.*

AUTO is displayed and available stations are programmed in order of waveband reception strength: FM followed by MW and LW. The last preset automatically stored will then be played.

Manual programming

1 *Tune to your desired station (see "Tuning to radio stations").*

2 *Press* **PROGRAM** *to activate programming.*

PROGRAM *flashes in the display.*

3 *Press* **PRESET ▲** *or* **▼** *(on the remote control ⏮ or ⏭) to allocate a number from 1 to 40 to this station.*

4 *Press* **PROGRAM** *again to confirm the setting.*

PROGRAM *disappears, the preset number and the frequency of the preset station are shown.*

5 *Repeat the above four steps to store other stations.*

You can override a preset station by storing another frequency in its place .

Tuning to preset radio stations

Press **PRESET** ▲ *or* ▼ *(on the remote control* ⏮ *or* ⏭*) until the desired preset station is displayed.*

RDS

Radio Data System *is a service that allows FM stations to show additional information. If you are receiving a RDS station,* **R·D·S** *and the station name are displayed.*
When automatic programming is used, RDS stations will be programmed first.

Scrolling through different RDS information

Press **RDS** *briefly and repeatedly to scroll through the following information (if available):*

- *Station name*
- *Programme type such as* NEWS, SPORT, POP M ...
- *Radio text messages*
- *Frequency*

Note:

- ***If you press RDS and the RDS signal is not available*** NO RDS ***is displayed.***

EON

Enhanced Other Network *allows you to search for an RDS station offering a certain programme type. If EON is available,* EON *is shown.*

Searching programme type (PTY)

PTY helps you find a desired programme type. To enable PTY, first programme RDS stations into the tuner memory (see "Programming radio stations")

1 *While receiving an RDS station, press* **RDS** *briefly until the programme type is displayed.*

2 *Press* **PRESET** ▲ *or* ▼ *(on the remote control* ⏮ *or* ⏭*) until the desired programme type is displayed.*

3 *Press and hold down on* **TUNING** ◀◀ *or* ▶▶ *(on the remote control* ◀◀ *or* ▶▶*) to start searching.*

The radio tunes to a RDS station broadcasting this programme type. If the programme type is not available TYPE NOT FOUND *is displayed.*

RDS Programme types

NO TYPE	*No programme type or undefined*
NEWS	*News*
AFFAIRS	*Current Affairs*
INFO	*Information*
SPORT	*Sport*
EDUCATE	*Education*
DRAMA	*Drama*
CULTURE	*Culture*
SCIENCE	*Science*
VARIED	*Varied*
POP M	*Pop Music*
ROCK M	*Rock Music*
EASY M	*Easy Listening Music*
LIGHT M	*Light classical Music*
CLASSICS	*Serious Classical Music*
OTHER M	*Other Music*
WEATHER	*Weather*
FINANCE	*Finance*
CHILDREN	*Children's programmes*
SOCIAL	*Social Affairs*
RELIGION	*Religion*
PHONE IN	*Phone In*
TRAVEL	*Travel*
LEISURE	*Leisure*
JAZZ	*Jazz Music*
COUNTRY	*Country Music*
NATION M	*National Music*
OLDIES	*Oldies Music*
FOLK M	*Folk Music*
DOCUMENT	*Documentary*
TEST	*Alarm Test*
ALARM	*Alarm*

Radio Reception

RDS News and Traffic Announcement (TA)

You may set up the tuner in such a way that listening to CD or tape is interrupted by the NEWS of a RDS station. This only works if the RDS station broadcasts a NEWS signal while sending the news.

1 *Tune to the desired RDS station.*

2 *Press* **NEWS/TA** *once or more on the remote control to select the NEWS option.*

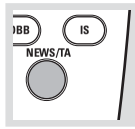

NEWS ON, TA ON *or* OFF *is displayed briefly.*

NEWS *is displayed if you have activated the NEWS or TA option. Changing listening source will not disarm the function.*

Notes:

- ***To avoid unwanted recordings, the NEWS announcement does not work while recording a tape.***
- ***When you receive RDS news or traffic announcements during CD playback, playback will pause and you will be able to hear the news/TA. Playback resumes after the broadcast has finished. In tape mode, the tape continues playing but you will hear the news/TA only until the broadcast has finished.***
- ***If you are using the RDS NEWS announcement with an EON station, the whole network is searched for the respective news.***

Disarming RDS News and Traffic Announcement

There are a number of ways to disarm the news feature:

Press **NEWS/TA** *on the remote control during reception of the news option.*
Press ⏻ **STANDBY ON** *on the system or remote control .*
Tune to a non-RDS-station.

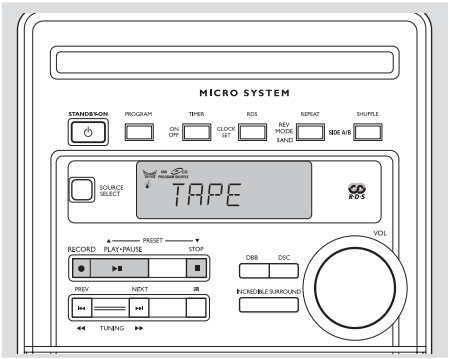

Tape playback

1 *Select* **TAPE** *source .*
The display shows TAPE *briefly. The tape counter* TAPE 000 *display with the* **SIDE A** *or* **SIDE B** *and rev erse mode status are then shown dur ing tape mode .*

2 *Press* **OPEN•CLOSE** *to open the tape door .*

3 *Inser t a recorded tape and close the tape door . Load the tape with the open side downward and the full spool to the left.*

4 *Press* **PLAY•PAUSE ▶II** *(on the remote control* **▶II***) to start playback.*

5 *By pressing* **|◀◀** *or* **▶▶|** *on the system (on the remote control* **◀◀** *or* **▶▶***), fast winding of tape is possib le in both directions.*
Du ring fast winding, you can monitor the tape message with the tape counter .

6 *To stop the tape , press* **STOP ■**.
To reset the tape counter , press **STOP ■** *again.*

Note:
– The sound source cannot be changed while recording a tape.

Switching tape sides

The tape side can be switched manually or automatically before or during tape playback.

Press **SIDE A/B** *(dur ing playback onl y* **▶II** *on the remote control).*
The displa y shows **SIDE A** *or* **SIDE B** *and the tape counter resets to* 000.

Reverse mode options

Press **REV MODE** *repeatedly to select y our option;*
: playback stops at the end of the tape .
: both sides are pl ayed once .
: both sides are pl ayed repeatedl y, up to 5 times each side .

General information on recording

Recording is permissible insofar as copyright or other r ights of third parties are not infringed.
For recording, use only NORMAL (IEC type I) tapes on which the tabs hav e not yet been brok en. This deck is not suited for recording on METAL (IEC IV) type tapes.
The best recording level is set automatically. Alter ing the VO LUME, INCREDIBLE SURROUND, DBB or INTERA CTIVE SOUND controls will not affect the recording in progress.
The recording sound quality might differ depending on the quality of y our recording source and the tape .
At the v ery beginning and end of the tape , no recording will take place during the 7 seconds when the leader tape passes the recorder heads.
To protect a tape from accidental erasure, have the tape in front of you and break out the left tab. Recording on this side is no longer possible. If, ho wev er, you wish to record ov er this side again, cov er the tabs with a piece of adhesive tape.

Tape Operation / Recording

Synchro start CD recording

1 *Select* **CD** *source .*

2 *Inser t a disc and if desired, programme track numbers.*

3 *Press* **OPEN•CLOSE** *to open the tape door .*

4 *Inser t a suitable tape into the deck and close the tape door .*

5 *Press* **RECORD** *to start recording.*
COPY *or* RECORD *is displayed br iefly and* **RECORD** *is shown during recording.*
Playing of the CD programme star ts automatically from the beginning of the CD after 7 seconds. It is not necessary to start the CD player separately.
If you wish, press **CLOCK** *once to monitor the counter display.*

6 *To stop recording, press* **STOP ■**.

Recording from the radio

1 *Tune to the desired r adio station (see "Tuning to radio stations").*

2 *Press* **OPEN•CLOSE** *to open the tape door .*

3 *Insert a suitable tape into the deck and close the tape door .*

4 *Press* **RECORD** *to start recording.*
RECORD *is displayed briefly and* **RECORD** *is shown dur ing recording.*
If you wish, press **CLOCK** *once to monitor the counter display.*

5 *To stop recording, press* **STOP ■**.

Recording from Aux

1 *Select* **AUX** *source .*

2 *If necessar y, prepare the additional appliance for recording.*

3 *Press* **RECORD** *to star t recording.*
RECORD *is displayed br iefly and* **RECORD** *is shown dur ing recording.*
If you wish, press **CLOCK** *once to monitor the counter display.*

4 *To stop recording, press* **STOP ■**.

Recording timer

To record from the radio, you will need to use a preset radio station and to set a start (ON) and finish (OFF) time .

1 *Insert a suitable tape into the deck.*
If desired, select tape reverse mode option.

2 *Select the preset radio station to record from .*

3 *Press* **TIMER ON•OFF** *for more than 2 seconds.*
TIMER *flashes and a source is displayed.*

4 *Press* **SELECT SOURCE** *repeatedl y, or turn* **VOLUME** *clockwise until* RECTUN *source is displayed.*

5 *Press* **TIMER ON•OFF** *to conf irm the source .*
SET ON TIME *is displayed,* **TIMER** *and the clock digits for the hours flash.*

6 *Tu rn* **VOLUME** *to set the hours: clockwise for hours up; anti-clockwise for hours down.*

7 *Press* **TIMER ON•OFF** *again.*
The clock digits for the minutes flash.

8 *Tu rn* **VOLUME** *to set the min utes: clockwise for minutes up; anti-clockwise for minutes down.*

9 *Press* **TIMER ON•OFF** *to conf irm the ON start time.*
SET OFF TIME *is displayed,* **TIMER** *and the clock digits for the hours flash.*

10 *Repeat steps* **6-8** *to set the finish time .*

11 *Press* **TIMER ON•OFF** *to conf irm the timer settings.*
TIMER *is shown and the recording timer is now set.*

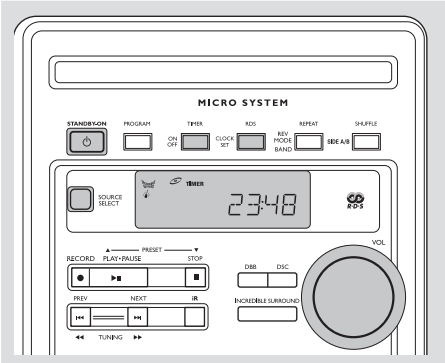

Setting the clock

There are two possible methods for setting the clock: manually or automatically by using RDS.

Automatic clock setting *(RDS versions only)*

1 *Tune to a RDS station (see "Radio Reception").*

2 *Press* **CLOCK SET** *for more than 2 seconds.*
SEARCH RDS TIME *is displayed for a maximum of 90 seconds; the time is then displayed.*
NO RDS TIME *is displayed if no time signal has been received and you will have to set the clock manually.*

Manual clock setting

1 *In standby, press* **CLOCK SET**.
The clock digits for the hours flash.

2 *Turn* **VOLUME** *to set the hours: clockwise for hours up; anti-clockwise for hours down.*

3 *Press* **CLOCK SET** *again.*
The clock digits for the minutes flash.

4 *Turn* **VOLUME** *to set the minutes: clockwise for minutes up; anti-clockwise for minutes down.*

5 *Press* **CLOCK SET** *to confirm the time.*

Note:
– *The backlight for clock display is dim in standby.*

Setting the timer

The system can be used as an alarm clock, whereby the CD, TUNER or TAPE is switched on at a set time. The clock time needs to be set first before the timer can be used.
You can also use it to record a favourite tuner programme at a set period (see "Recording timer")
During setting, if no button is pressed within 90 seconds, the system will exit timer setting mode automatically.

1 *In any mode, press* **TIMER ON•OFF** *for more than 2 seconds.*

2 *Turn* **VOLUME** *clockwise to select sound source.*
Display sequence shows CD, TUNER, TAPE *or* REC TUNER.

3 *Press* **TIMER ON•OFF** *to confirm your desired mode.*
The selected source CD *or* TUNER *is shown. Display sequence scrolls* SET ON TIME *and* **TIMER** *flashes. The clock digits for the hours flash.*

4 *Turn* **VOLUME** *to set the hours: clockwise for hours up; anti-clockwise for hours down.*

5 *Press* **TIMER ON•OFF** *again.*
The clock digits for the minutes flash.

6 *Turn* **VOLUME** *to set the minutes: clockwise for minutes up; anti-clockwise for minutes down.*

7 *Press* **TIMER ON•OFF** *to confirm the time.*
The timer is now set and activated.

Activating and deactivating TIMER

In standby or during playback, press **TIMER ON•OFF** *once.*
Display shows **TIMER** *if activated, and disappears if deactivated.*

Activating and deactivating SLEEP

The sleep timer enables the system to switch off by itself after a set period of time. The clock time needs to be set first before the sleep timer can be used.

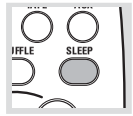

Press **SLEEP** *on the remote control once or more.*
Display shows SLEEP *and one of the sleep time options in sequence:* 60, 45, 30, 15, SLEEP OFF, 60... *if you have selected a time. Once SLEEP is activated,* SLEEP ON *scrolls across the display at repeated intervals.*

To deactivate, press **SLEEP** *on the remote control once or more until* SLEEP OFF *is shown, or press* **STANDBY ON** *on the system or remote control.*
SLEEP OFF *scrolls across the display.*

Specifications

AMPLIFIER
Output power ..... 2 x 10 W RMS
..... 20 W + 20 W MPO
Signal-to-noise ratio ..... 65 dBA (IEC)
Frequency response ..... 40 – 20000 Hz, ± 3 dB
Input sensitivity AUX ..... 0.5 V (max. 2 V)
Impedance loudspeakers 8
Impedance headphones ..... 32 -1000

CD PLAYER
Frequency range ..... 20 – 20000 Hz
Signal-to-noise ratio ..... 75 dBA

TUNER
FM wave range ..... 87.5 – 108 MHz
MW wave range ..... 531 – 1602 kHz
LW wave range ..... 153 – 279 kHz
Sensitivity at 75
– mono, 26 dB signal-to-noise ratio ..... 2.8 ∝V
– stereo, 46 dB signal-to-noise ratio ..... 61.4 ∝V
Selectivity ..... 28 dB
Total harmonic distortion 5%
Frequency response ..... 63 – 12500 Hz (± 3 dB)
Signal-to-noise-ratio ..... 50 dBA

TAPE DECK
Frequency response
Normal tape (type I) ..... 80 – 12500 Hz (8 dB)
Signal-to-noise ratio
Normal tape (type I) ..... 50 dBA
Wow and flutter ..... 0.4% DIN

SPEAKERS
Bass reflex system
Dimensions (w x h x d) . 156 x 231 x 190 (mm)

GENERAL INFORMATION
AC Power ..... 220 – 230V / 50 Hz
Dimensions (w x h x d) ... 140 x 231 x 280(mm)
Weight (with/without speakers) .....
..... approx. 6.7 / 3.0 kg
Standby power consumption ..... < 3 W

Subject to modification

Maintenance

Cleaning the Cabinet

Use a soft cloth slightly moistened with a mild detergent solution. Do not use a solution containing alcohol , spirits, ammonia or abrasives.

Cleaning Discs

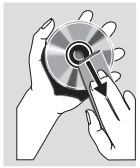

When a disc becomes dirty, clean it with a cleaning cloth. Wipe the disc from the centre out.
Do not use solvents such as benzene, thinner, commercially available cleaner s, or antistatic spray intended for analogue records.

Cleaning the disc lens

After prolonged use , dirt or dust ma y accumulate at the disc lens. To ensure good playback quality, clean the disc lens with Philips CD Lens Cleaner or any commercial ly available cleaner. Follow the instructions supplied with cleaner.

Cleaning the Heads and the Tape Paths

To ensure good recording and playback quality, clean the heads Ⓐ, the capstan(s) Ⓑ, and pressure roller(s) Ⓒ after every 50 hour s of tape oper ation.

Caution: Do not rotate the heads during cleaning.

Use a cotton swab slightly moistened with cleaning fluid or alcohol .
You can also clean the heads by playing a cleaning tape once .

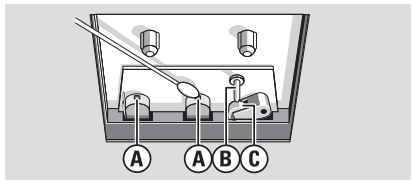

Demagnetising the heads

Use a demagnetising tape a vailable at your dealer.

Troubleshooting

WARNING

Under no circumstances should you try to repair the system yourself, as this will invalidate the warranty. Do not open the system as there is a risk of electric shock.

If a fault occurs, first check the points listed below before taking the system for repair. If you are unable to remedy a problem by following these hints, consult your dealer or service centre.

Problem	Solution
CD OPERATION	
"NO DISC" **is displayed.**	– *Inser t a disc.* – *Check if the disc is inser ted upside do wn.* – *Wait until the moisture condensation at the lens has cleared.* – *Replace or clean the disc , see "Maintenance".* – *Use a finalised CD-R W or CD-R.*

Troubleshooting

RADIO RECEPTION	
Radio reception is poor.	– *If the signal is too weak, adjust the antenna or connect an exter nal antenna for better reception.* – *Increase the distance between the Micro HiFi System and your TV or VCR.*
TAPE OPERATION / RECORDING	
Recording or playback cannot be made.	– *Clean deck parts, see "Maintenance".* – *Use only normal (IEC I) tape for recording.*
"CHECK TAPE" **is displayed.**	– *Apply a piece of adhesive tape over the missing tab space.*
The tape deck door cannot open.	– *Remove and reconnect the AC power plug and switch on the system again.*
GENERAL	
The system does not react when buttons are pressed.	– *Remove and reconnect the AC power plug and switch on the system again.*
Sound cannot be heard or is of poor quality.	– *Adjust the volume .* – *Disconnect the headphones.* – *Check that the speakers are connected correctly.* – *Check if the stripped speaker wire is clamped.*
The left and right sound outputs are reversed.	– *Check the speaker connections and location.*
The remote control does not function properly.	– *Select the source (CD or TUNER, for example) before pressing the function button (▶, ⏮, ⏭).* – *Reduce the distance between the remote control and the system .* – *Inser t the batteries with their polarities (+/– signs) aligned as indicated.* – *Replace the batteries.* – *Point the remote control directly toward IR sensor on the front of the system .*
The timer is not working.	– *Set the clock correctly.* – *Press TIMER ON•OFF to switch on the timer.* – *If a recording is in progress, stop the recording.*
The Clock/Timer setting is erased.	– *Power has been interrupted or the power cord has been disconnected. Reset the clock/timer.*

For more information onoperation instruction please visit Philips Audio internet site :

http://www.audio.philips.com

4 - 1

DISASSEMBLY DIAGRAM

A. To remove Cabinet Rear
B. To remove CD Tray
C. To remove Tuner Board Bracket
D. To remove Combi Board Bracket
E. To remove Bottom Plate
F. To remove Tape Deck
G. To remove Front Board

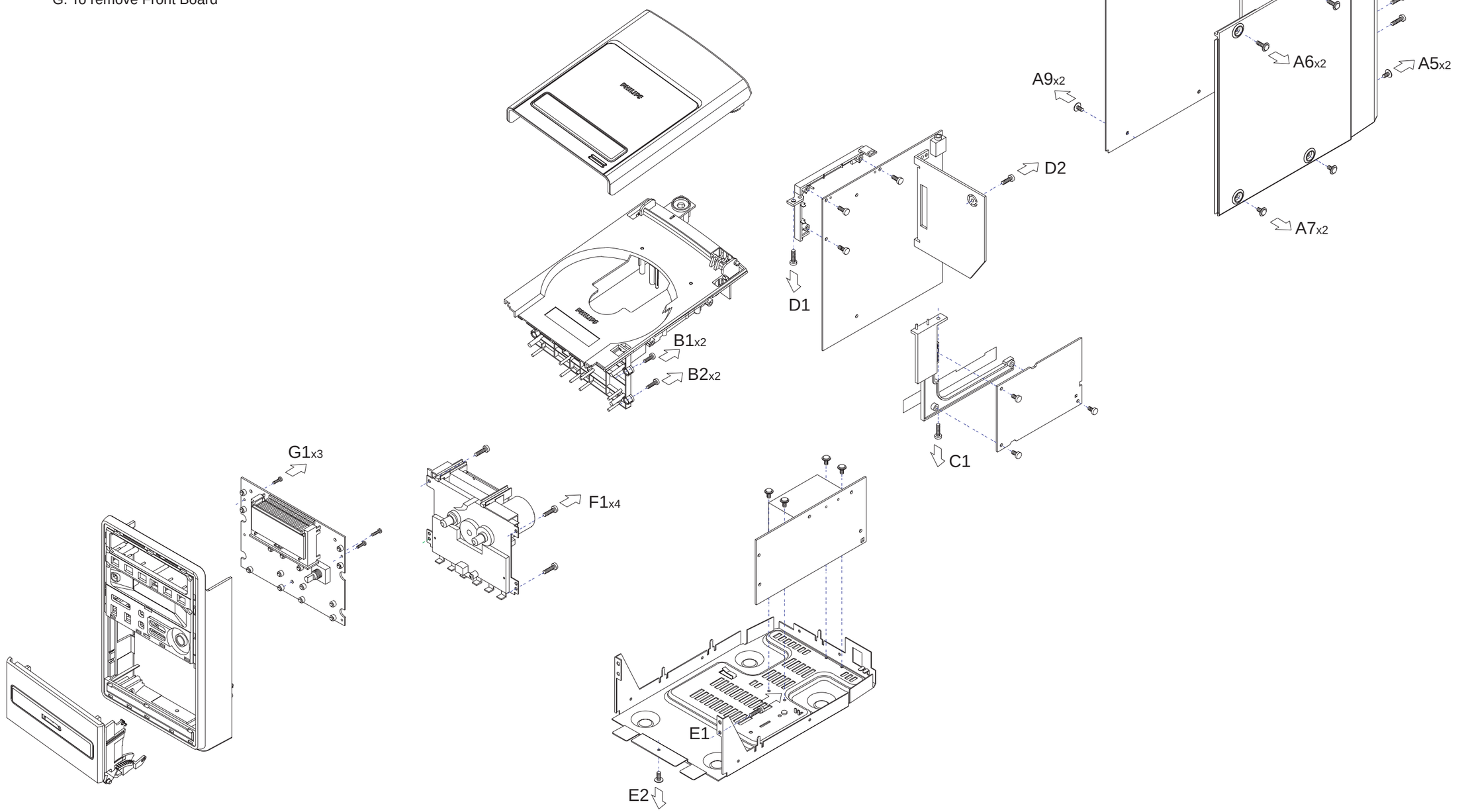

4 - 2

CD SERVICE TEST PROGRAM

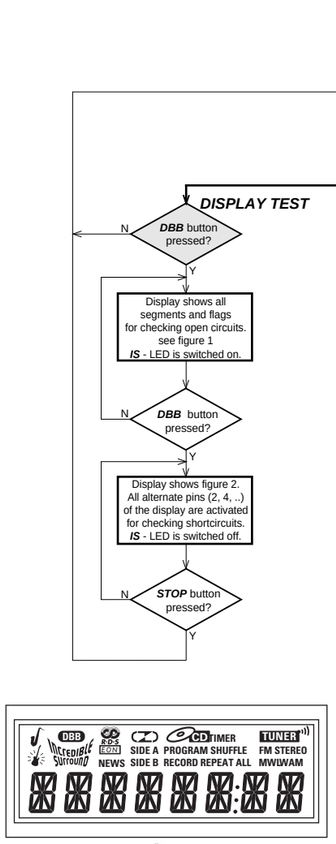

fig. 1

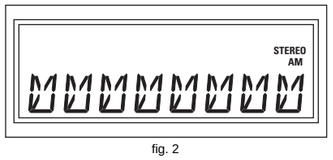

fig. 2

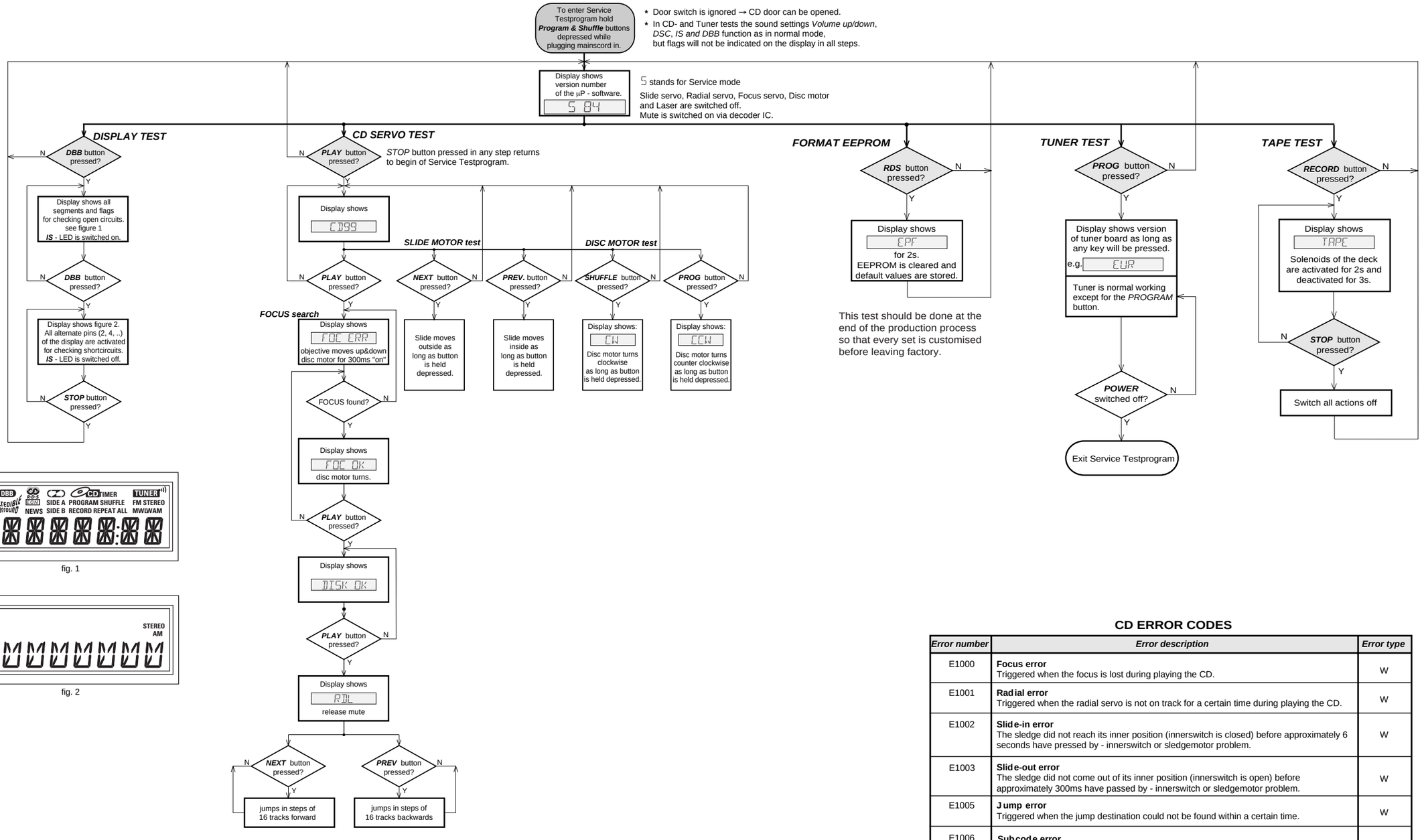

TUNER VERSIONS

	EUR	USA	OSE
REGION & SET VERSIONS	***EUROPE*** ***FM/MW*** /22/25	***USA*** ***FM/MW*** /37	***OVERSEAS*** ***FM/MW*** [1] Grid switchable 100/10kHz - 50/9kHz /21/21M/30

table 2

[1] To toggle frequency grid press ***SHUFFLE*** button for more than 5s in normal tuner mode (**not** in service testmode).

Display will show either GRID 9 or GRID 10 for 2 s.

CD ERROR CODES

Error number	*Error description*	*Error type*
E1000	**Focus error** Triggered when the focus is lost during playing the CD.	W
E1001	**Radial error** Triggered when the radial servo is not on track for a certain time during playing the CD.	W
E1002	**Slide-in error** The sledge did not reach its inner position (innerswitch is closed) before approximately 6 seconds have pressed by - innerswitch or sledgemotor problem.	W
E1003	**Slide-out error** The sledge did not come out of its inner position (innerswitch is open) before approximately 300ms have passed by - innerswitch or sledgemotor problem.	W
E1005	**Jump error** Triggered when the jump destination could not be found within a certain time.	W
E1006	**Subcode error** No valid subcode for a certain time during play.	W
E1007	**PLL error** The Phase-Lock-Loop could not lock within a certain time.	W
E1008	**Turntable motor error** Generated when the CD could not reach 75% of speed during start-up within a certain time. Discmotor problem.	W
E1020	**Focus search error** The focus point has not been found within a certain time.	F

table 1

Error type: W = Warning → set continues operation, message remains on the display until next error occurs or any key is pressed.

F = Fatal Error → set stops operation, message remains on the display.

4 - 3

Abbreviations and Pin-description of CD Ics

SERVO PROCESSOR SAA7325H

SYMBOL	PIN	DESCRIPTION
HFREF	1	comparator common mode input
HFIN	2	comparator signal input
ISLICE	3	current feedback output from data slicer
V_{SSA1}	4(1)	analog ground 1
V_{DDA1}	5(1)	analog supply voltage 1
I_{ref}	6	reference current output pin
V_{RIN}	7	reference voltage for servo ADC's
D1	8	unipolar current input (central diode signal input)
D2	9	unipolar current input (central diode signal input)
D3	10	unipolar current input (central diode signal input)
D4	11	unipolar current input (central diode signal input)
R1	12	unipolar current input (satellite diode signal input)
R2	13	unipolar current input (satellite diode signal input)
V_{SSA2}	14(1)	analog ground 2
CROUT	15	crystal/resonator output
CRIN	16	crystal/resonator input
V_{DDA2}	17(1)	analog supply voltage 2
LN	18	DAC left channel differential output - negative
LP	19	DAC left channel differential output - positive
V_{neg}	20	DAC negative reference input
V_{pos}	21	DAC positive reference input
RN	22	DAC right channel differential output - negative
RP	23	DAC right channel differential output - positive
SELPLL	24	selects whether internal clock multiplier PLL is used
TEST1	25	test control input 1; this pin should be tied LOW
CL16	26	16.9344 MHz system clock output
DATA	27	serial d4(1)ata output (3-state)
WCLK	28	word clock output (3-state)
SCLK	29	serial bit clock output (3-state)
EF	30	C2 error flag output (3-state)
TEST2	31	test control input 2; this pin should be tied LOW
KILL	32	kill output (programmable; open-drain)
V_{SSD1}	33(1)	digital ground 2
V2/V3	34	versatile I/O: input versatile pin 2 or output versatile pin 3 (open-drain)
WCLI	35	word clock iutput (for data loopback to DAC)
SDI	36	serial data input (for data loopback to DAC)
SCLI	37	serial bit clock input (for data loopback to DAC)
RESET	38	power-on reset input (active LOW)
SDA	39	microcontroller interface data I/O line (open-drain output)
SCL	40	microcontroller interface clock line input

Abbreviations and Pin-description of CD Ics

SERVO PROCESSOR SAA7325H

SYMBOL	PIN	DESCRIPTION
RAB	41	microcontroller interface R/W and load control line input (4-wire bus mode)
SILD	42	microcontroller interface R/W and load control line input (4-wire bus mode)
STATUS	43	servo interrupt request line/decoder status register output (open-drain)
TEST3	44	test control input 3; this pin should be tied LOW
RCK	45	subcode clock input
SUB	46	P-to-W subcode bits output (3-state)
SFSY	47	subcode frame sync output (3-state)
SBSY	48	subcode block sync output (3-state)
CL11/4	49	11.2896 MHz or 4.2336 MHz (for microcontroller) clock output
V_{SSD2}	50(1)	digital ground 3
DOBM	51	bi-phase mark output (externally buffered; 3-state)
$V_{DDD1(P)}$	52(1)	digital supply voltage 2 for periphery
CFLG	53	correction flag output (open-drain)
RA	54	radial actuator output
FO	55	focus actuator output
SL	56	sledge control output
$V_{DDD2(C)}$	57(1)	digital supply voltage 3 for core
V_{SSD3}	58(1)	digital ground 4
MOTO1	59	motor output 1; versatile (3-state)
MOTO2	60	motor output 2; versatile (3-state)
V4	61	versatile output pin 4
V5	62	versatile output pin 5
V1	63	versatile intput pin 1
LDON	64	laser drive on output (open-drain)

Note : All supply pins must be connected to the same external power supply voltage.

BLOCK DIAGRAM OF INTEGRATED CIRCUIT

IC 7 4 00 TMP87 CM23 F

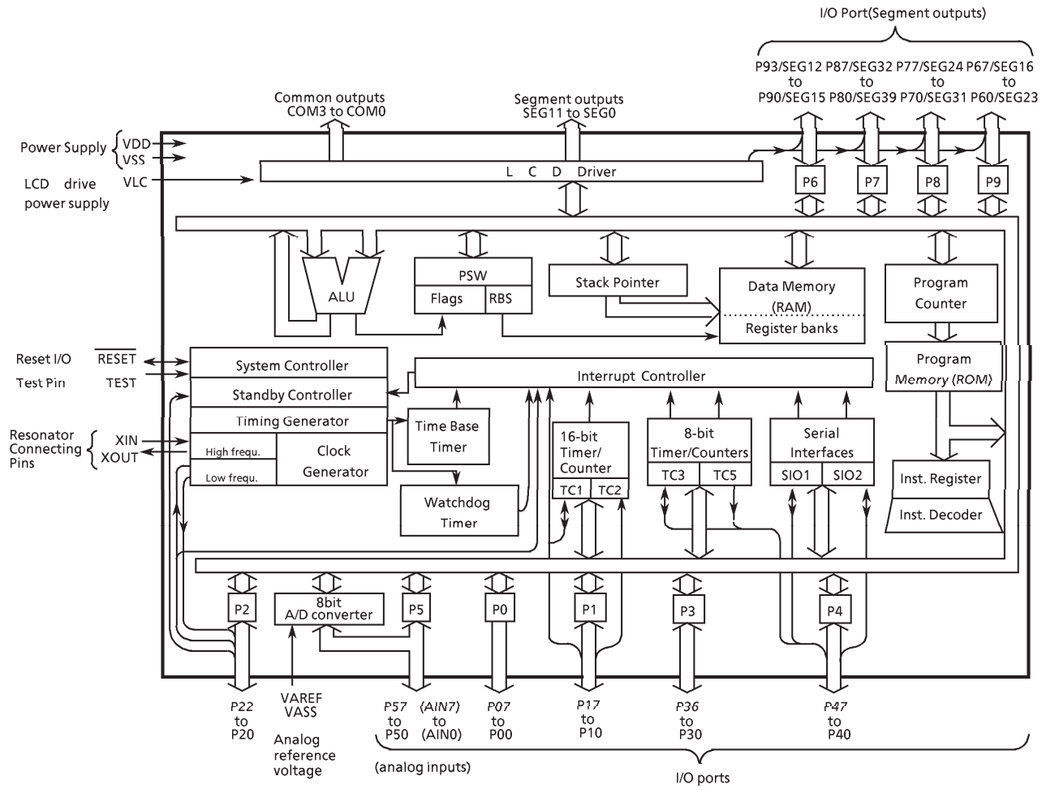

PINS DESCRIPTION OF IC 7 4 00 TMP87 CM23 F

PIN FUNCTION

PIN NAME	Input / Output	FUNCTION	
P07 to P00	I/O	8-bit programmable input/output ports (tri-state).	
P17, P16		Each bit of these ports can be individually configured as an input or an output under software control. When used as timer/counter in or external interrupt input, the latch must be set to "0". When used as PPG output or divider output, the latch must be set to "1".	
P15 (TC2)	I/O (Input)		Timer/Counter 2 input
P14 (PPG)	I/O (Output)		Programmable pulse generator output
P13 (DVO)			Divider output
P12 (INT2 / TC1)	I/O (Input)		External interrupt input 2 or Timer/Counter 1 input
P11 (INT1)			External interrupt input 1
P10 (INT0)			External interrupt input 0
P22 (XTOUT)	I/O (Output)	3-bit input/output port with latch. When used as an input port, the latch must be set to "1".	Resonator connecting pins (32.768kHz). For inputting external clock, XTIN is used and XTOUT is opened.
P21 (XTIN)	I/O (Input)		
P20 (INT5 / STOP)			External interrupt input 5 or STOP mode release signal input
P36 to P30	I/O	7-bit input/output port with latch. When used as input port, the latch must be set to "1".	
P47 (SO2)	I/O (Output)	8-bit input/output port with latch. When used as input port or a SIO input/output port, the latch must be set to "1".	SIO2 serial data output
P46 (SI2)	I/O (Input)		SIO2 serial data input
P45 (SCK2)	I/O (I/O)		SIO2 serial clock input/output
P44 (SO1)	I/O (Output)		SIO1 serial data output
P43 (SI1)	I/O (Input)		SIO1 serial data input
P42 (SCK1)	I/O (I/O)		SIO1 serial clock input/output
P41 (PWM/PDO)	I/O (Output)		8-bit PWM output, 8-bit programmable divider output
P40 (INT3/TC3)	I/O (Input)		External interrupt input 3, Timer/Counter 3 input
P57 (AIN07) to P50 (AIN00)	I/O (Input)	8-bit programmable input/output port (tri-state). Each bit of the port can be individually configured as an input or an output under software control. When used as analog input, the latch must be set to "0".	A/D converter analog inputs
SEG39 (P80) to SEG32 (P87)	Output (I/O)	8-bit input/output port with latch. When used as an input port, the latch must be set to "1".	LCD segment outputs. When used as segment output, the control register of P6, P7, P8 and P9 must be set to "1".
SEG31 (P70) to SEG24 (P77)	Output (I/O)		
SEG23 (P60) to SEG16 (P67)	Output (I/O)		
SEG15 (P90) to SEG12 (P93)	Output (I/O)	4-bit input/output port with latch. When used as an input port, the latch must be set to "1".	
SEG11 to SEG0	Output	LCD segment outputs	
COM3 to COM0	Output	LCD common outputs	
XIN, XOUT	Input, Output	Resonator connecting pins for high-frequency clock. For inputting external clock, XIN is used and XOUT is opened.	
RESET	I/O	Reset signal input or watchdog timer output/address-trap-reset output	
TEST	Input	Test pin for out-going test. Be fixed to low.	
VDD, VSS	Power Supply	+ 5 V, 0 V (GND)	
VAREF, VASS		Analog reference voltage inputs (High, Low)	
VLC	LCD drive power supply.		

5 - 1

SET BLOCK DIAGRAM

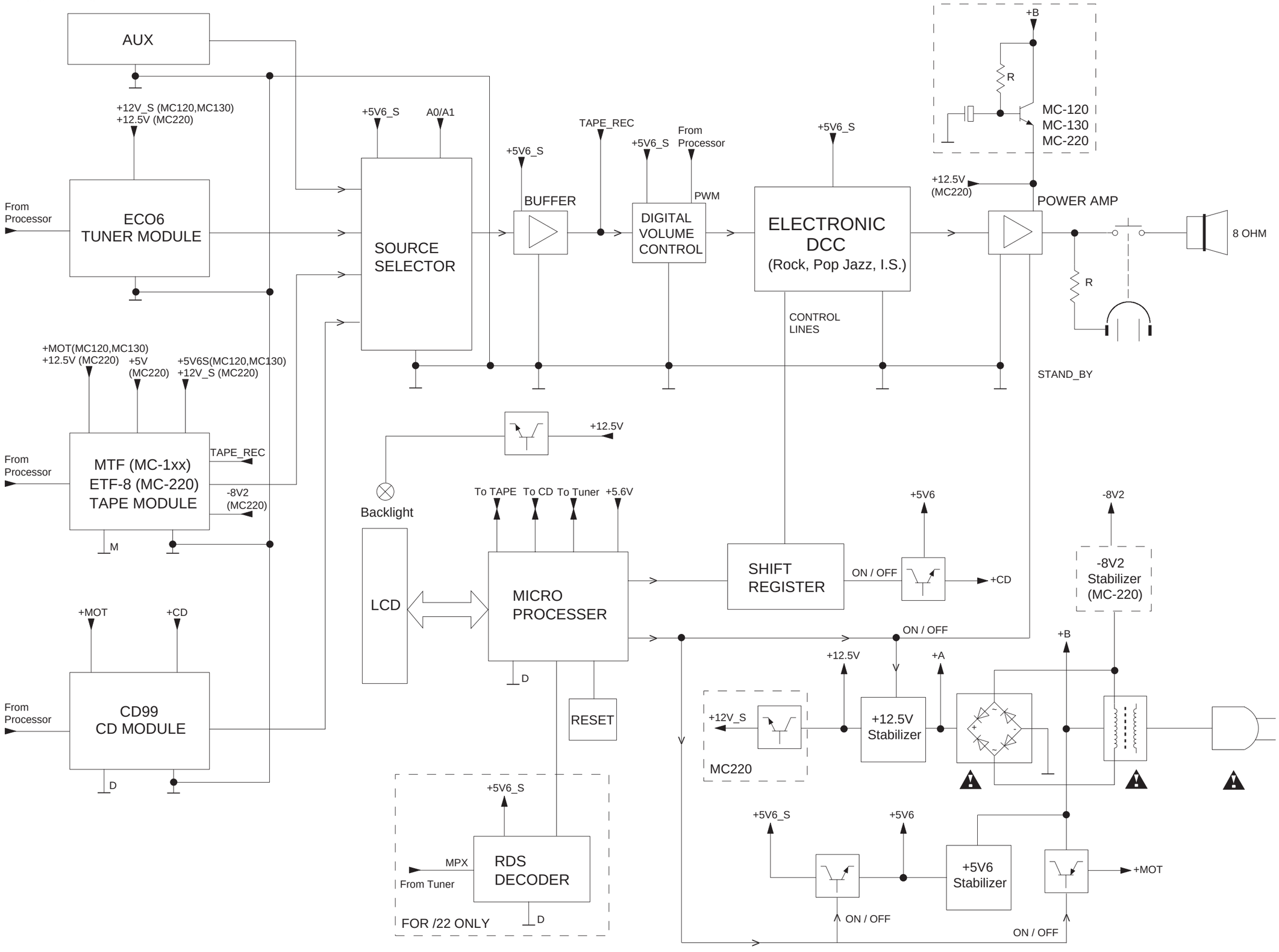

5 - 2

SET WIRING DIAGRAM

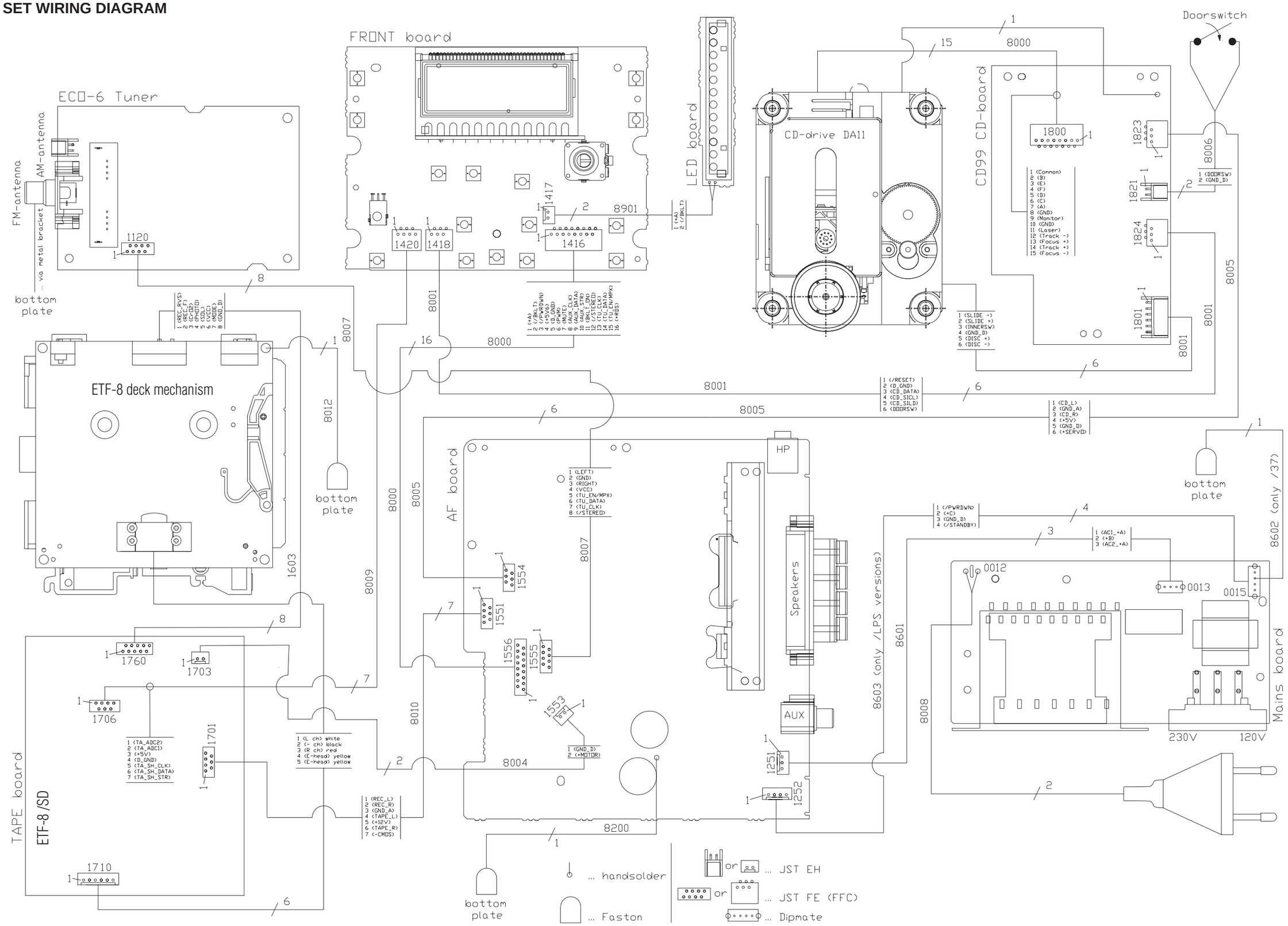

CIRCUIT DIAGRAM - LED BOARD

3 901 C2	6902 B1	6907 A3	6912 B3
3 902 C2	6903 B1	6908 B3	8901A B1
3 903 C3	6904 A2	6909 B3	8901B B1
3 904 C3	6905 B2	6910 A3	
6901 A1	6906 B2	6911 B3	

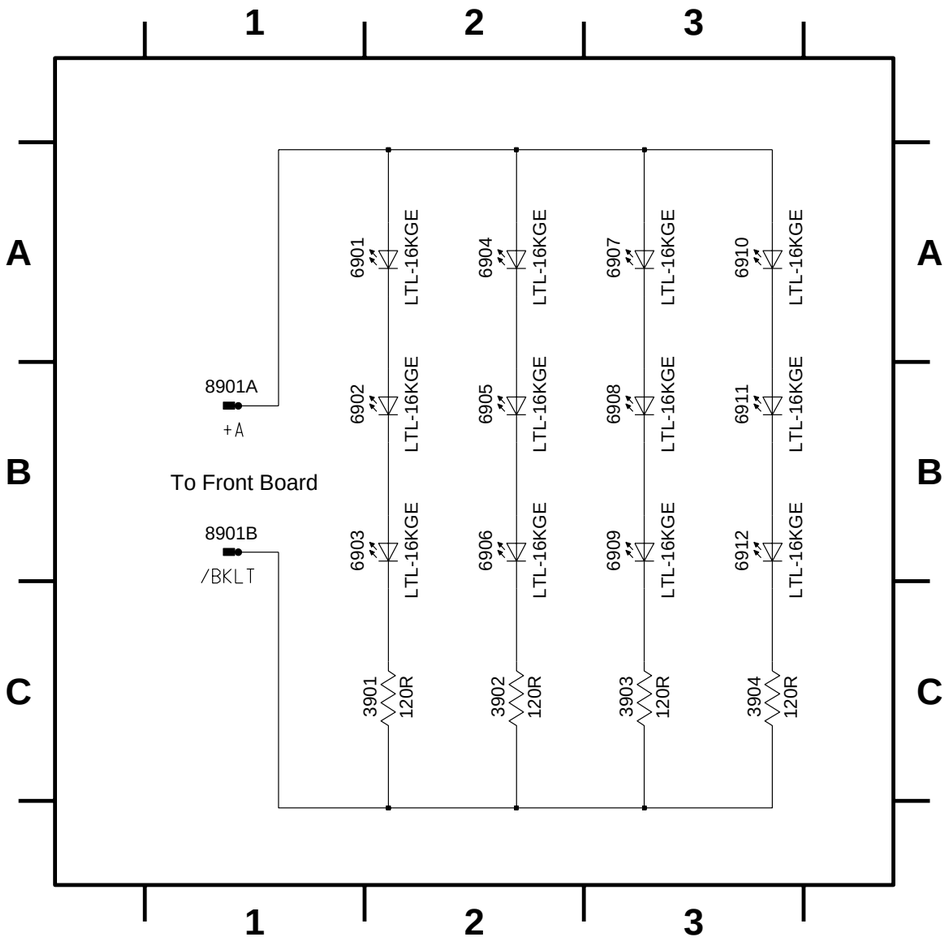

LAYOUT DIAGRAM - LED BOARD

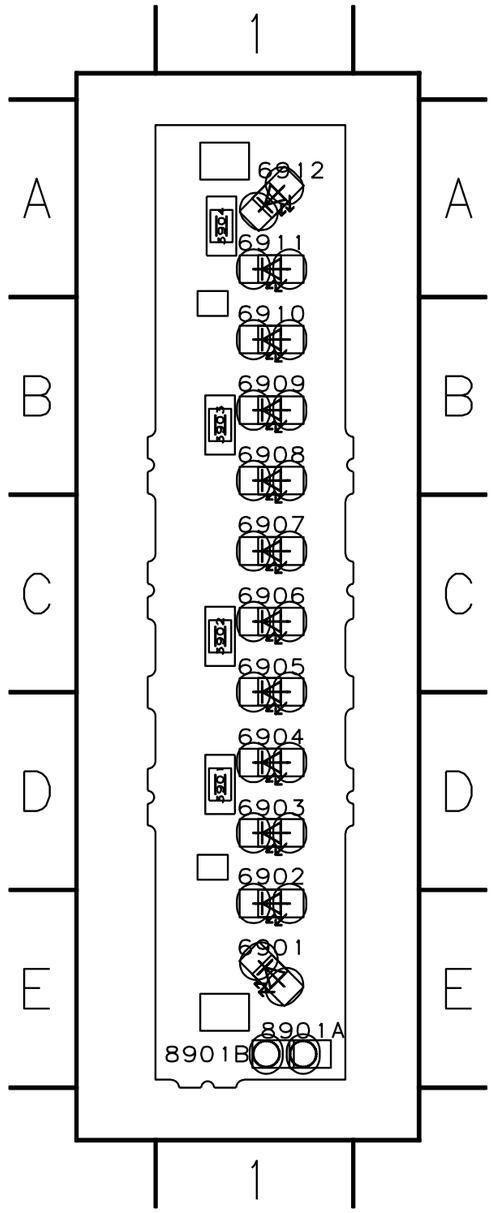

3901	D1
3902	C1
3903	B1
3904	A1
6901	E1
6902	D1
6903	D1
6904	D1
6905	C1
6906	C1
6907	C1
6908	B1
6909	B1
6910	B1
6911	A1
6912	A1
8901A	E1
8901B	E1

7 - 1

CIRCUIT DIAGRAM - ECO6 SYSTEM CENELEC BOARD

TUNER BOARD ECO6 / SYSTEMS-CENELEC

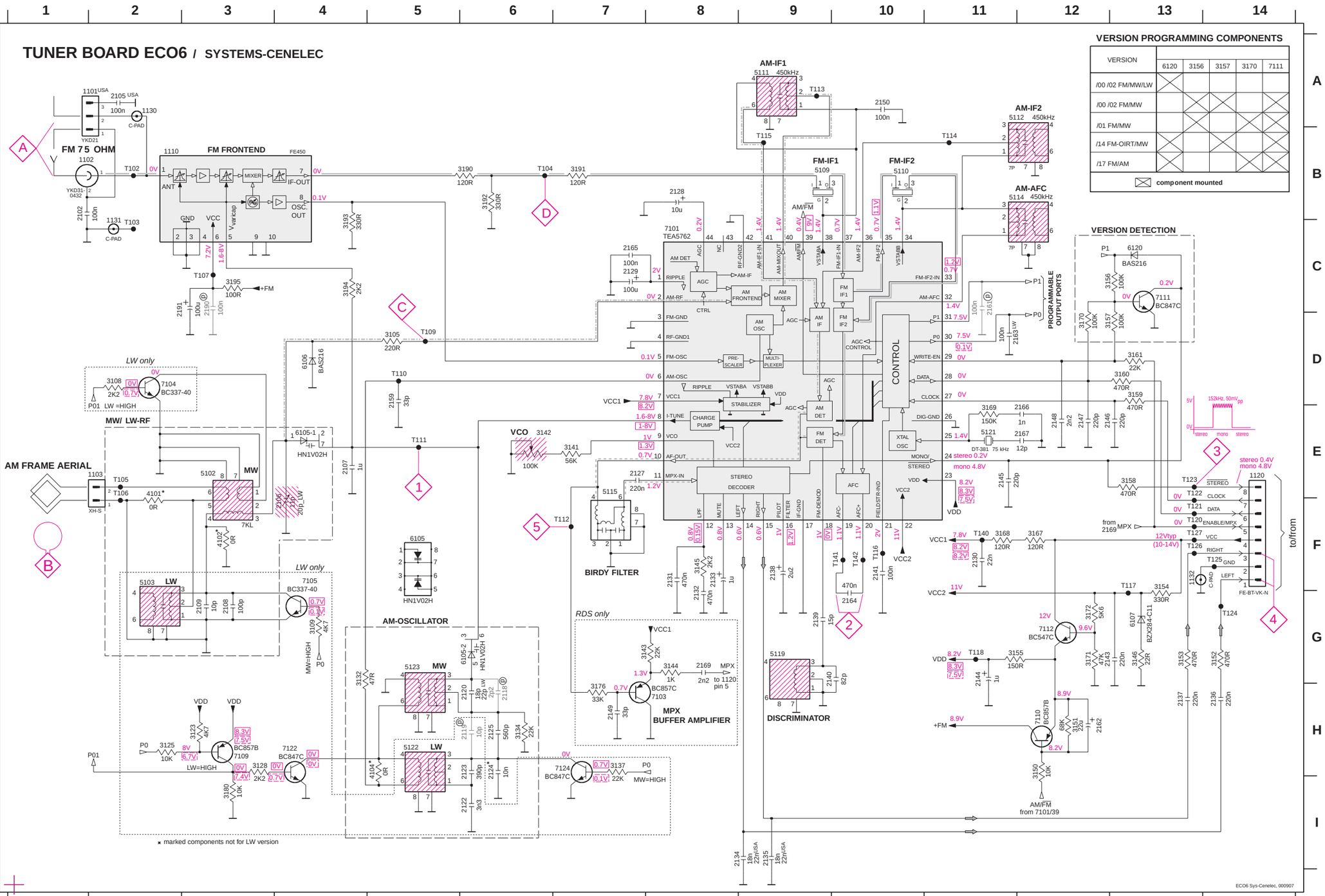

LEGEND

* ... only assembled in FM/AM-version
(p)...for provision only
USA ... for USA version only
LW ... for LW version only

SMD j umper 41xx 0R

...V FM mode stereo
...V MW mode
...V LW mode
(V) EVM
voltages measured while set is tuned to a strong transmitter

Signal path
FM
AM
MPX (Audio Frequency)
AF - left/right

* marked components not for LW version

1101 A2
1102 B1
1103 E2
1110 B2
1120 E14
1130 A2
1131 C2
1132 F13
2102 B1
2105 A2
2106 E3
2107 E4
2108 G3
2109 G3
2118 H6
2119 H6
2120 H6
2122 I6
2123 H6
2124 H6
2125 H6
2127 E7
2128 B8
2129 C7
2130 F11
2131 F8
2132 F8
2133 F8
2134 I8
2135 I9
2136 H14
2137 H13
2138 F9
2139 G9
2140 G9
2141 F10
2143 G12
2144 G11
2145 E11
2146 E12
2147 E12
2148 E12
2149 H7
2150 A10
2159 D5
2161 C11
2162 H12
2163 D11
2164 G10
2165 C7
2166 E11
2167 E11
2169 G8
2190 C3
2191 C3
3105 D5
3108 D2
3109 G4
3123 H3
3125 H2
3128 H3
3132 G4
3134 H6
3137 H7
3141 E7
3142 E6
3143 G7
3144 G8
3145 F8
3146 G13
3150 H12
3151 H12
3152 G14
3153 G13
3154 F13
3155 G12
3156 C12
3157 D12
3158 E13
3159 D13
3160 D13
3161 D13
3167 F12
3168 F11
3169 E11
3170 D12
3171 G12
3172 G12
3176 H7
3180 I3
3190 B6
3191 B7
3192 B6
3193 B4
3194 C4
3195 C3
4101 E2
4102 F3
4104 H5
5102 E3
5103 F2
5109 B9
5110 B10
5111 A9
5112 A11
5114 B11
5115 E7
5119 G9
5121 E11
5122 H5
5123 G5
6105-1 E4
6105-2 G6
6106 D4
6107 G13
6120 C13
7101 C8
7103 H8
7104 D2
7105 F4
7109 H3
7110 H12
7111 C13
7112 G12
7122 H4
7124 H7
T102 B2
T103 B2
T104 B6
T105 E2
T106 E2
T107 C3
T109 D5
T110 D5
T111 E5
T112 F7
T113 A9
T114 B11
T115 F10
T116 F10
T117 F13
T118 F13
T120 E13
T121 F13
T122 G13
T123 G14
T124 F14
T125 F14
T126 F13
T127 F13
T140 F11
T141 F10
T142 F10

LAYOUT DIAGRAM - ECO6 SYSTEM CENELEC BOARD

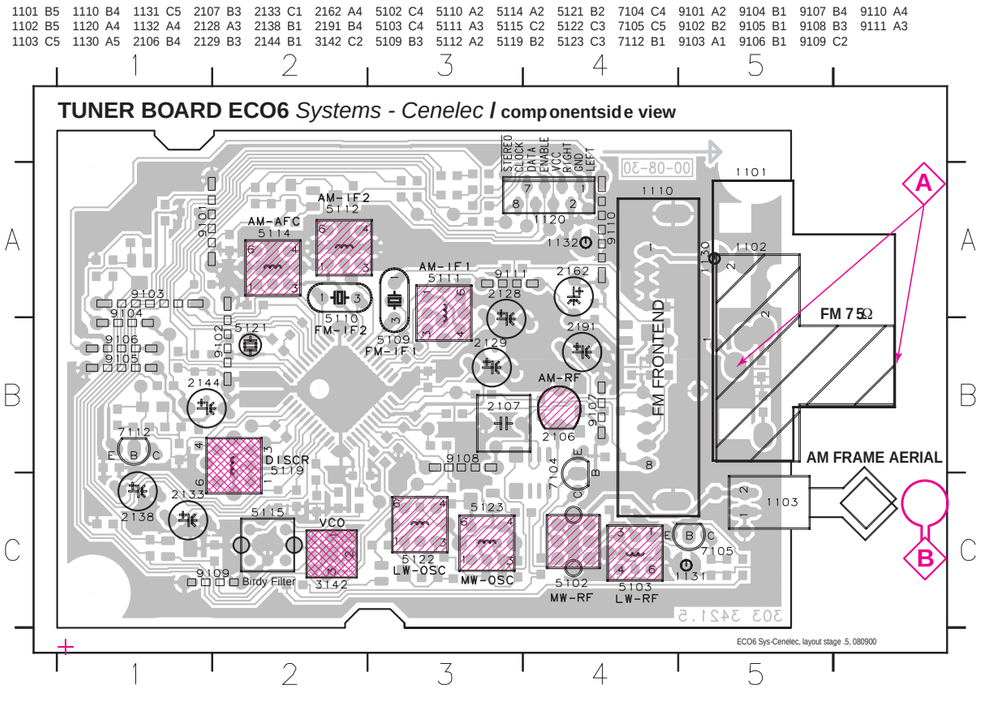

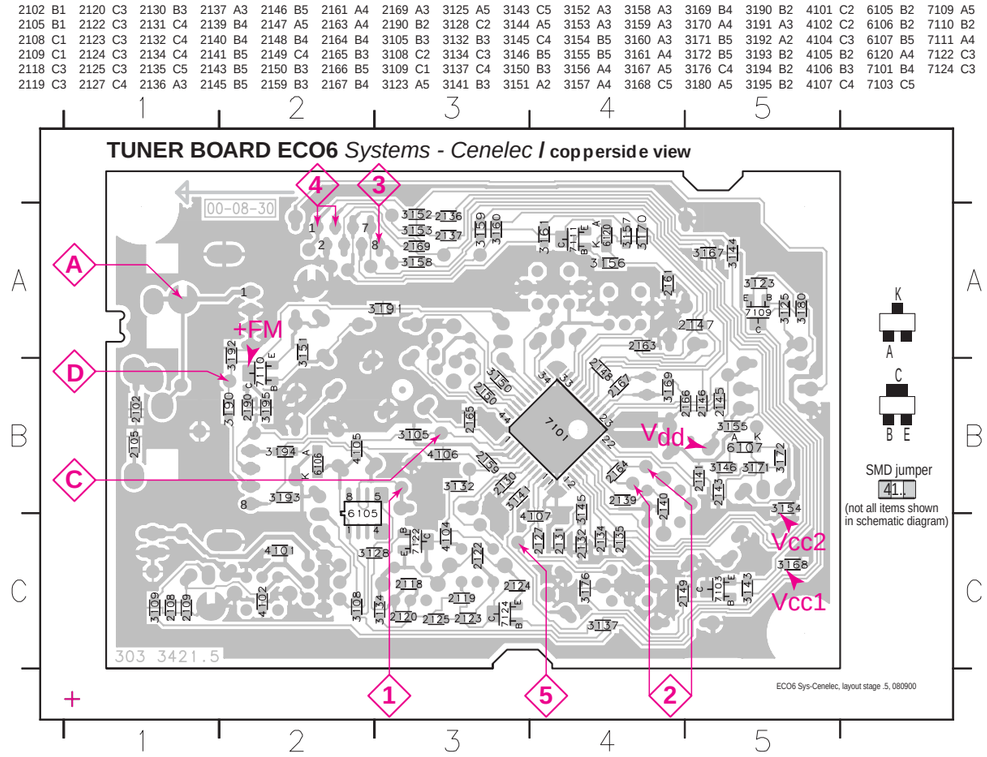

These assembly drawings show a summary of all possible versions.
For components used in a specific version see schematic diagram respectively partslist.

TUNER ADJUSTMENT TABLE (ECO6 Cenelec FM/MW - and FM/MW/LW - versions with AM-frame aerial)

Waverange	Input frequency	Input	Tuned to	Adjust	Output	Scope/ Voltmeter
VARICAP ALIGNMENT						
FM 87.5 - 108MHz (50kHz grid)			108MHz	check	◇1	8V ±1.2V
			87.5MHz	check		1.6V ±0.5V
MW 531 - 1602kHz (9kHz grid)			1602kHz	5123		8V ±0.2V 3-band 6.9V ±0.2V 2-band
			531kHz	check		1.1V ±0.4V
LW 153 - 279kHz (3kHz grid)			279kHz	5122		8V ±0.2V
			153kHz	check		1.1V ±0.4V
FM - IF						
FM	10.7MHz, 45mV continuous wave	◇D	IC 7101 pin 21, shortcircuit to block AFC, 2141	5119	◇2	0mV ±3mV
FM - VCO						
FM	98MHz, 1mV continuous wave	◇A	98MHz	3142	◇3	152kHz ±1kHz [1]
FM RF (channel separation)	Note: The FM-frontend unit has already been adjusted by the factory and needs therefore no further adjustments for service purposes.					
FM	98MHz, 1mV 90% Left + 9% pilot mod=1kHz	◇A	98MHz	IF coil inside FM frontend 1110	◇4	right channel min.
AM IF						
MW	450kHz connect pin 6 of IC 7101 (AM Osc.) with 3.3kΩ to Vcc	◇C Δf = ±10kHz V_{RF} = 0.5mV (as low as possible)	IC 7101 pin 36, 100nF, 220R	5111	◇5	max., f_o symmetric
			IC 7101 pin 40, 100nF, 220R, see remark [2]	5112		
AM AFC **MW**		◇C continuous wave V_{RF} = 2mV		5114	◇2	0mV ±2mV
AM RF [3]						
MW	1494kHz	◇B Δf = ±30kHz V_{RF} as low as possible	1494kHz	2106	◇5	max., f_o symmetric
	558kHz		558kHz	5102		
LW	198kHz		198kHz	5103		

ECO6 Sys Cenelec, 190599

Use Service Testprogram. By selecting the TUNER TEST test frequencies will be stored as preset frequencies automatically.

[1] If sensitivity of frequency counter is too low adjust to max. channel separation (input signal: stereo left 90% + 9%, adjust output on right channel to minimum)

[2] RC network serves for damping the IF-filter while adjusting the other one.

[3] For AM RF adjustments the original frame antenna has to be used! MW has to be aligned before LW.

↕ Repeat

7 - 3

CIRCUIT DIAGRAM - ECO6 SYSTEM NON-CENELEC BOARD

TUNER BOARD ECO6 / SYSTEMS NON CENELEC

VERSION PROGRAMMING COMPONENTS

VERSION	6120	3156	3157	3170	7111
/00 /02 FM/MW/LW	X				
/00 /02 FM/MW		X			
/01 FM/MW			X		
/14 FM-OIRT/MW				X	
/17 FM/AM					X
/06 FM-Japan/AM	X				

X component mounted

VERSION DETECTION

LEGEND

ⓟ...for provision only
USA ... for USA version only
E-EU ... for East European version only
J ...for Japanese version only

...V FM mode stereo
...V MW mode
...V LW mode
EVM
voltages measured while set is tuned to a strong transmitter

Signal path
FM
AM
MPX (Audio Frequency)
AF - left/right

ECO6 Sys-non Cenelec, 000911

1101 A1
1102 B1
1103 F2
1120 E14
1130 A2
1131 B2
1132 G13
2101 B3
2102 B1
2103 C7
2104 B3
2105 A2
2106 F3
2107 F4
2119 H6
2120 G6
2124 H6
2125 H6
2126 F7
2127 E7
2128 C8
2129 C7
2130 F11
2131 G8
2132 G8
2133 G8
2134 H8
2135 H9
2136 G14
2137 G13
2138 F9
2139 G9
2140 G9
2141 F10
2143 G12
2144 G11
2145 F12
2146 E12
2147 E12
2148 E12
2149 H7
2150 A10
2152 E4
2153 E5
2154 D5
2155 D5
2159 F6
2161 C11
2163 D11
2164 F10
2165 C7
2166 E11
2167 E11
2169 H8
3101 E4
3102 D4
3103 C6
3104 A7
3105 B6
3132 G5
3134 H6
3141 E7
3142 E7
3143 G7
3144 H7
3145 F8
3146 G13
3152 G14
3153 G13
3154 G13
3155 G11
3156 C12
3157 C12
3158 E13
3159 D13
3160 D12
3161 D13
3167 F12
3168 F11
3169 E11
3170 C12
3172 G12
3176 G7
3181 E6
5102 F2
5109 B9
5110 B10
5111 A8
5112 A11
5114 B11
5119 G9
5121 E11
5123 G5
5130 E5
5131 C6
6103 B2
6105-1 F3
6105-2 G5
6106 C3
6107 G13
6120 C13
6130 E5
6131 D5
7101 C8
7102 C6
7103 H7
7111 C13
7112 G12
T102 B2
T103 B2
T105 F2
T106 F2
T109 B6
T110 F5
T111 F4
T112 F7
T113 A8
T114 B10
T115 A8
T116 F10
T117 G13
T118 G11
T120 F13
T121 F13
T122 F13
T123 E13
T124 G14
T125 F14
T126 F13
T127 F13
T128 D7
T140 F11
T141 F10
T142 F10

LAYOUT DIAGRAM - ECO6 SYSTEM NON-CENELEC BOARD

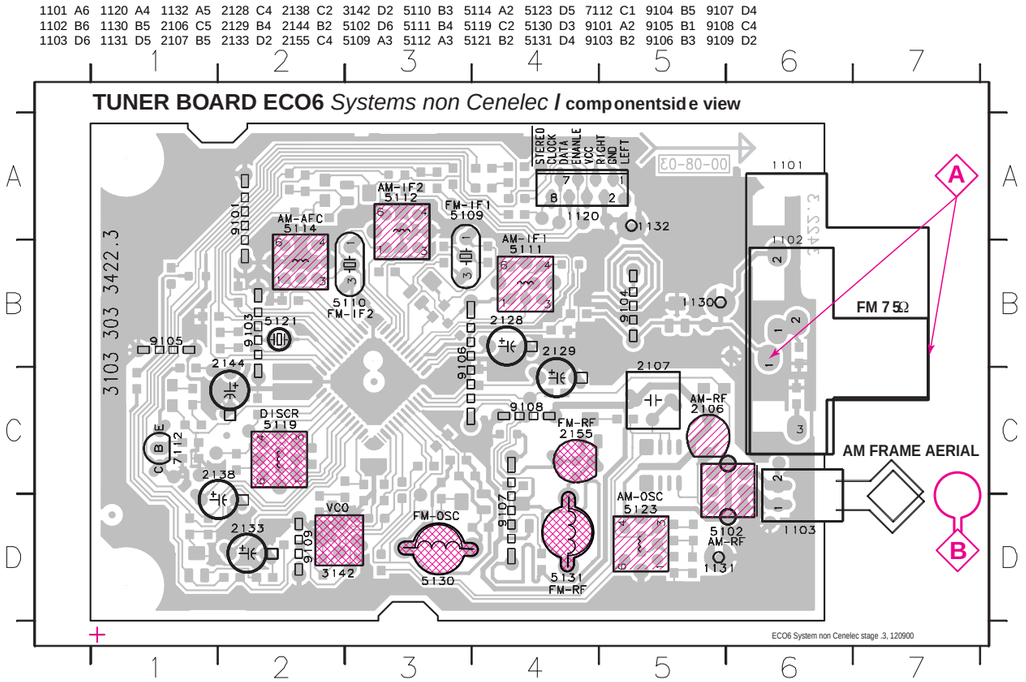

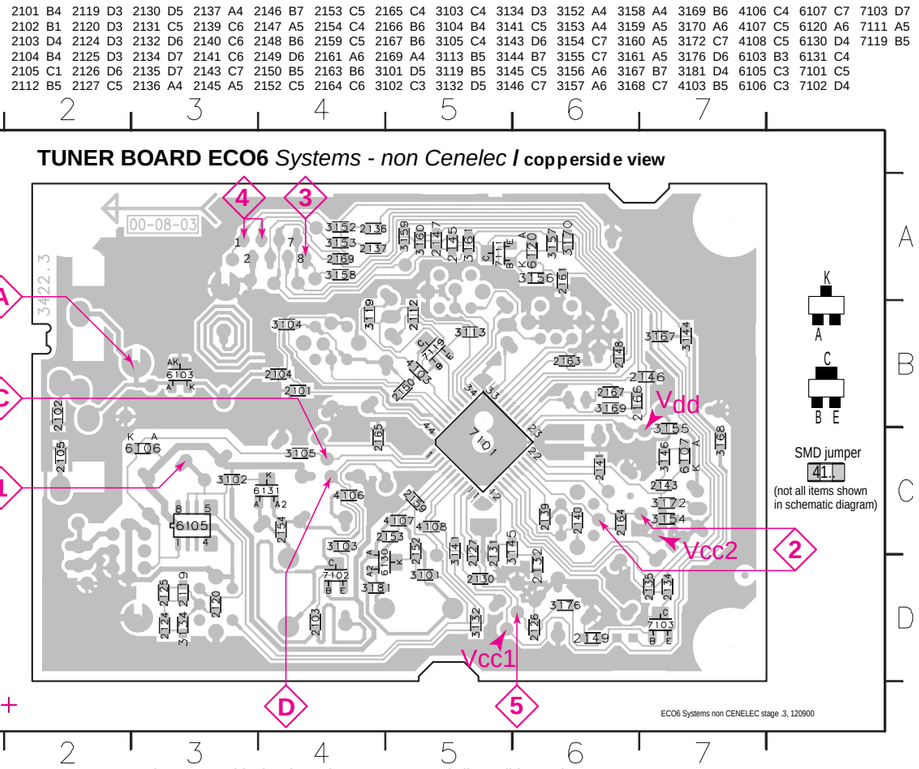

These assembly drawings show a summary of all possible versions.
For components used in a specific version see schematic diagram respectively partslist.

TUNER ADJUSTMENT TABLE (ECO6 FM/MW- and FM/MW/LW - versions with AM-frame aerial)

Waverange	Input frequency	Input	Tuned to	Adjust	Output	Scope/ Voltmeter
VARICAP ALIGNMENT						
FM 87.5 - 108MHz (65.81 - 74, 87.5 - 108MHz)			108MHz	5130	1	8V ±0.2V
			87.5MHz (65.81MHz)	check		4.3V ±0.5V (1.2V ±0.5V)
MW FM/AM-version, 10kHz grid 530 - 1700kHz			1700kHz	5123		8V ±0.2V
			530kHz	check		1.1V ±0.4V
FM/MW-version, 9kHz grid 531 - 1602kHz			1602kHz	5123		6.9V ±0.2V
			531kHz	check		1.1V ±0.4V
LW 153 - 279kHz			279kHz	5122		8V ±0.2V
			153kHz	check		1.1V ±0.4V
MW FM/MW/LW- version, 9kHz grid 531 - 1602kHz			1602kHz	5123		8V ±0.2V
			531kHz	check		1.1V ±0.4V
FM IF						
FM	10.7MHz, 45mV continuous wave	D	IC 7101 21 shortcircuit to block AFC 2141	5119	2	0 ± 3 mV DC
FM RF						
FM 87.5 - 108MHz (65.81 - 74, 87.5 - 108MHz)	108MHz	A	108MHz	2155	4	MAX
	87.5MHz (65.81MHz)	mod=1kHz Δf=±22.5kHz	87.5MHz (65.81MHz)	5131		
VCO						
FM	98MHz, 1mV continuous wave	A	98MHz	3142	3	152kHz ±1kHz 1)
AM IF						
MW	450kHz connect pin 6 of IC 7101 (AM Osc.) with 3.3kΩ to Vcc	C Δf=±10kHz V_{RF} = 0.5mV (as low as possible)	IC 7101 36 220R 100nF	5111	5	max. f_o symmetric
			IC 7101 40 220R 100nF see remark 2)	5112		
AM AFC **MW**		C continuous wave V_{RF} = 2mV		5114	2	0 ± 2 mV DC
AM RF 3)						
MW 4) FM/MW/LW- and FM/MW-version (9kHz grid) 531 - 1602kHz	1494kHz	B	1494kHz	2106	5	max. f_o symmetric
	558kHz		558kHz	5102		
LW	198kHz		198kHz	5103		
MW FM/AM-version, 10kHz grid 530 - 1700kHz	1500kHz	Δf = ±30kHz V_{RF} as low as possible	1500kHz	2106		
	560kHz		560kHz	5102		

ECO6, Sys + PA with frame aerial, 070799

Use Service Testprogram. By selecting the TUNER TEST test frequencies will be stored as preset frequencies automatically.

1) If sensitivity of frequency counter is too low adjust to max. channel separation (input signal: stereo left 90% + 9%, adjust output on right channel to minimum)

2) RC network serves for damping the IF-filter while adjusting the other one.

3) For AM RF adjustments the original frame antenna has to be used !

4) MW has to be aligned before LW.

Repeat

8 -1

CIRCUIT DIAGRAM - ETF8 SD

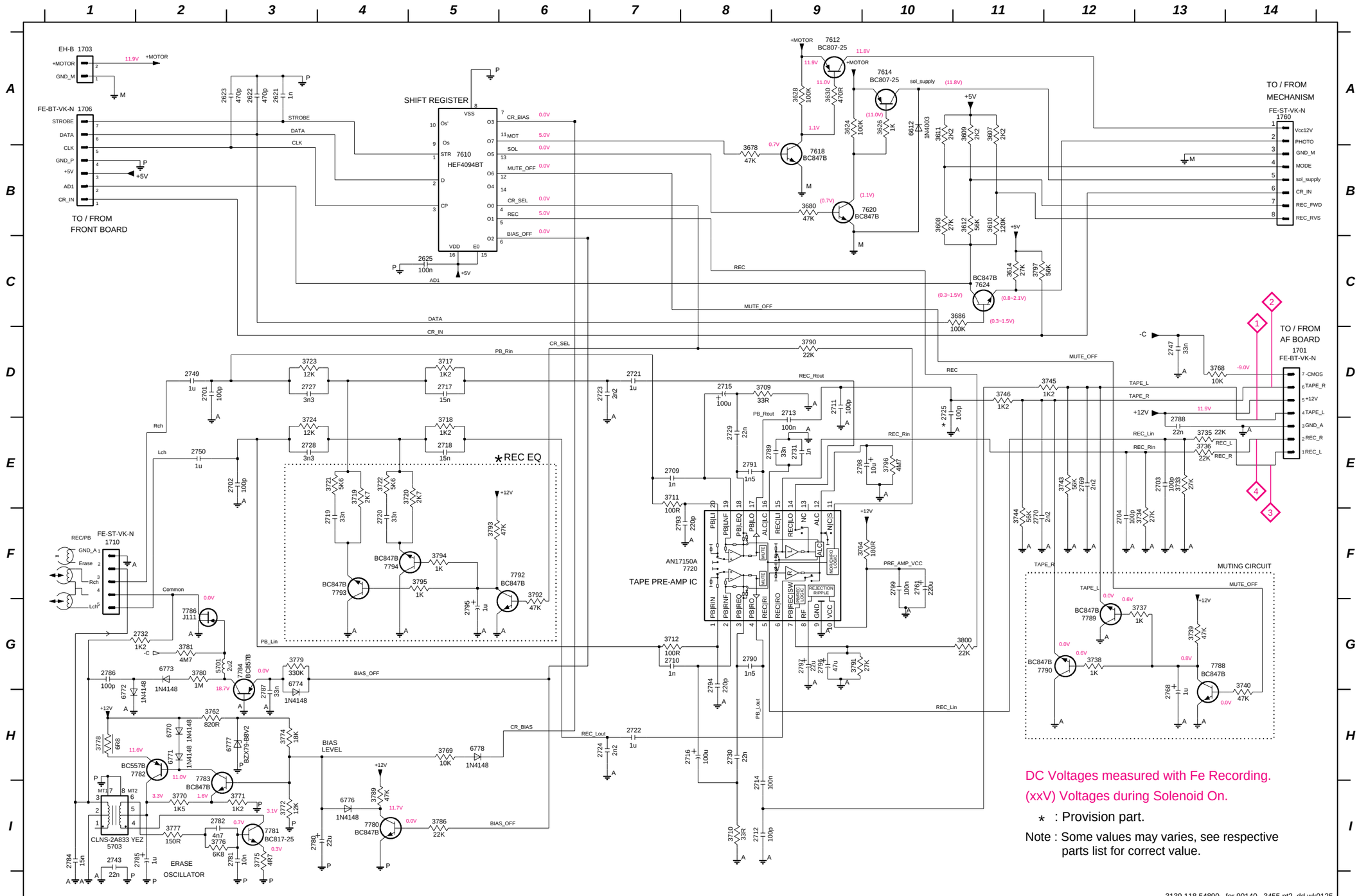

1701 D14	3768 D13
1703 A1	3769 H5
1706 A1	3770 I2
1710 F1	3771 I3
1760 A14	3772 I3
2621 A3	3774 H3
2622 A3	3775 I3
2623 A2	3776 I2
2625 C5	3777 I2
2701 D2	3778 H1
2702 E3	3779 G3
2703 E13	3780 G2
2704 F12	3781 G2
2709 E7	3786 I5
2710 G7	3789 I4
2711 D9	3790 D9
2712 I8	3791 G9
2713 D9	3792 F6
2714 I8	3793 F5
2715 D8	3794 F5
2716 H8	3795 F5
2717 D5	3796 E10
2718 E5	3797 C11
2719 F4	3800 G11
2720 F4	5701 G2
2721 D7	5703 I1
2722 H7	6612 A10
2723 D7	6770 H2
2724 H7	6771 H2
2725 D10	6772 H1
2727 D3	6773 G2
2728 E3	6774 G3
2729 E8	6776 I4
2730 H8	6777 H3
2731 E9	6778 H5
2732 G2	7610 B5
2743 I1	7612 A9
2747 D13	7614 A10
2749 D2	7618 B9
2750 E2	7620 B9
2761 F10	7624 C11
2768 H13	7720 F8
2769 E12	7780 I4
2770 F11	7781 I3
2780 I3	7782 H2
2781 I3	7783 I2
2782 I2	7784 G3
2784 I1	7786 G2
2785 I2	7788 G13
2786 G1	7789 G12
2787 H3	7790 G12
2788 E13	7792 F6
2789 E8	7793 F4
2790 G8	7794 F4
2791 E8	
2793 F7	
2794 G8	
2795 G5	
2796 G9	
2797 G9	
2798 E9	
2799 F10	
3607 A11	
3608 B10	
3609 A11	
3610 B11	
3611 A10	
3612 B11	
3614 C11	
3624 A9	
3626 A10	
3628 A9	
3630 A9	
3678 B8	
3680 B9	
3686 C11	
3709 D8	
3710 I8	
3711 E7	
3712 G7	
3717 D5	
3718 E5	
3719 E4	
3720 E5	
3721 E4	
3722 E4	
3723 D3	
3724 E3	
3733 E13	
3734 F13	
3735 E13	
3736 E13	
3737 G13	
3738 G12	
3739 G13	
3740 G14	
3743 E12	
3744 F11	
3745 D12	
3746 D11	
3762 H2	
3764 F10	

LAYOUT DIAGRAM - ETF8 SD BOARD

1701 A2	2715 A4	2795 B3	6612 A1	6777 C2	9704 B3
1703 A1	2716 B4	2796 B3	6770 C2	6778 C2	9705 B4
1706 B2	2761 A3	2797 B3	6771 C2	7782 C3	9706 B3
1710 A4	2768 A2	2798 A3	6772 C3	7786 A4	
1760 A1	2780 B1	3778 C3	6773 B3	9701 C2	
2713 A3	2784 B4	5701 A4	6774 C3	9702 C1	
2714 B2	2785 C3	5703 C4	6776 C2	9703 A4	

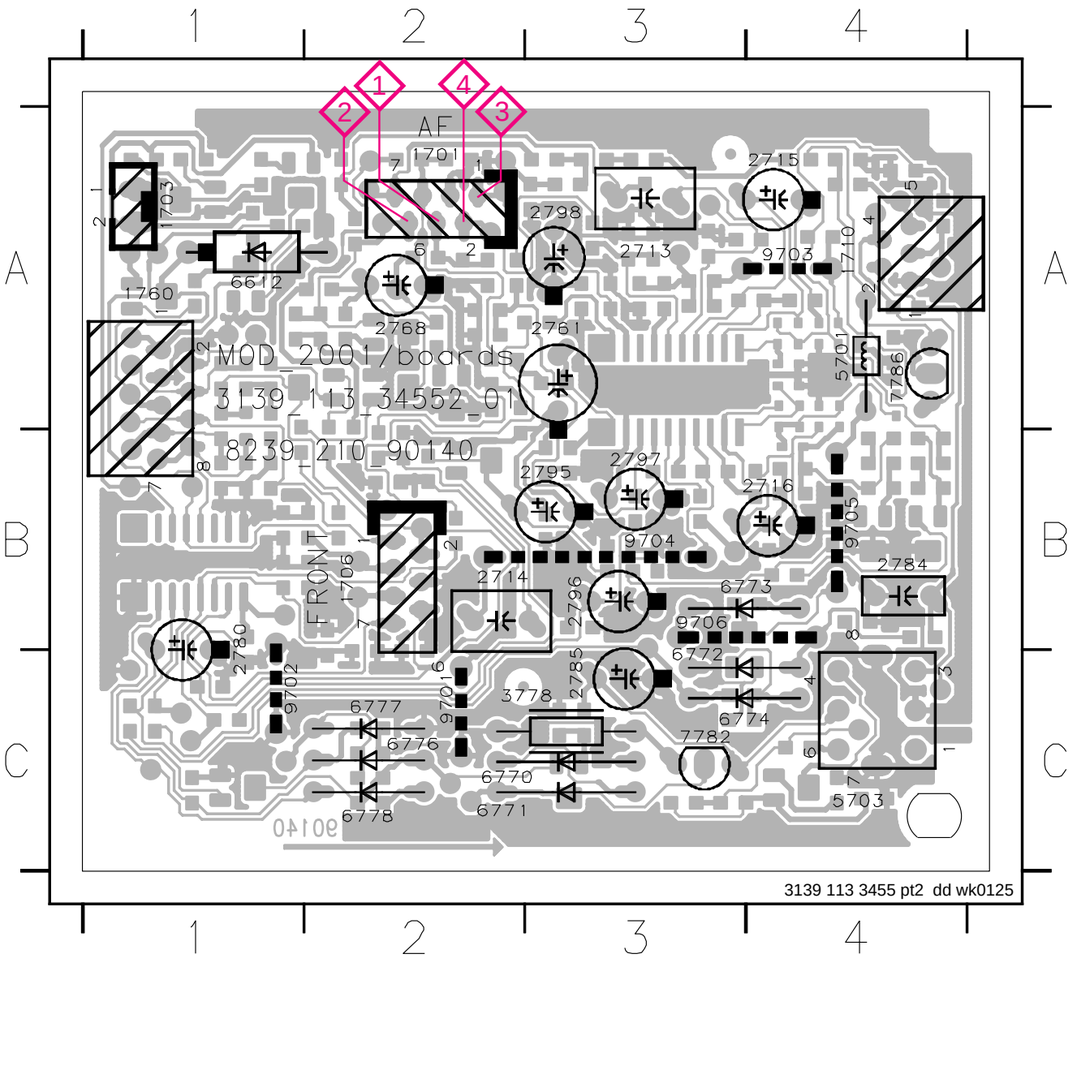

3139 113 3455 pt2 dd wk0125

8 - 2

CHIP LAYOUT - ETF8 SD BOARD

2621 B4	2729 A1	3609 B4	3724 B1	3777 C1	4712 B3	7614 A4
2622 C4	2730 B1	3610 A4	3733 A3	3779 C2	4718 B2	7618 A4
2623 B4	2731 A1	3611 A4	3734 A2	3780 B1	4719 B2	7620 A4
2625 B4	2732 A1	3612 A4	3735 A3	3781 A2	4720 B2	7624 A3
2701 A1	2743 B1	3614 A4	3736 A2	3786 C4	4721 B2	7720 A2
2702 A1	2747 A2	3624 A4	3737 A3	3789 C3	4723 B3	7780 C4
2703 A3	2749 A1	3626 A4	3738 A3	3790 A2	4725 B3	7781 C1
2704 A2	2750 A1	3628 A4	3739 A3	3791 B2	4726 A3	7783 C2
2709 A1	2769 A3	3630 A4	3740 B3	3792 C4	4727 B3	7784 B1
2710 A1	2770 A3	3678 A4	3743 A3	3793 B3	4729 B2	7788 A3
2711 A2	2781 C1	3680 A4	3744 A4	3794 B1	4730 B2	7789 A3
2712 B3	2782 C2	3686 B3	3745 B3	3795 B1	4731 C3	7790 A3
2717 A2	2786 B1	3709 A1	3746 A3	3796 A2	4732 A2	7792 B3
2718 B1	2787 C2	3710 A1	3762 C3	3797 B4	4733 B2	7793 B1
2719 B1	2788 A3	3711 A1	3764 A2	3800 C4	4734 A3	7794 B1
2720 B1	2789 A2	3712 A1	3768 A2	4701 A3	4735 A2	
2721 A2	2790 B2	3717 A2	3769 C3	4702 A4	4738 A1	
2722 B2	2791 A1	3718 B1	3770 C2	4705 A3	4739 A1	
2723 A2	2793 A1	3719 B1	3771 C2	4707 C3	4741 A3	
2724 B1	2794 A1	3720 B1	3772 C4	4708 A2	4746 A1	
2725 A3	2799 B2	3721 B1	3774 C3	4709 B3	4747 A1	
2727 A1	3607 B4	3722 B1	3775 C1	4710 B3	7610 B4	
2728 A1	3608 A4	3723 A1	3776 C2	4711 B4	7612 A4	

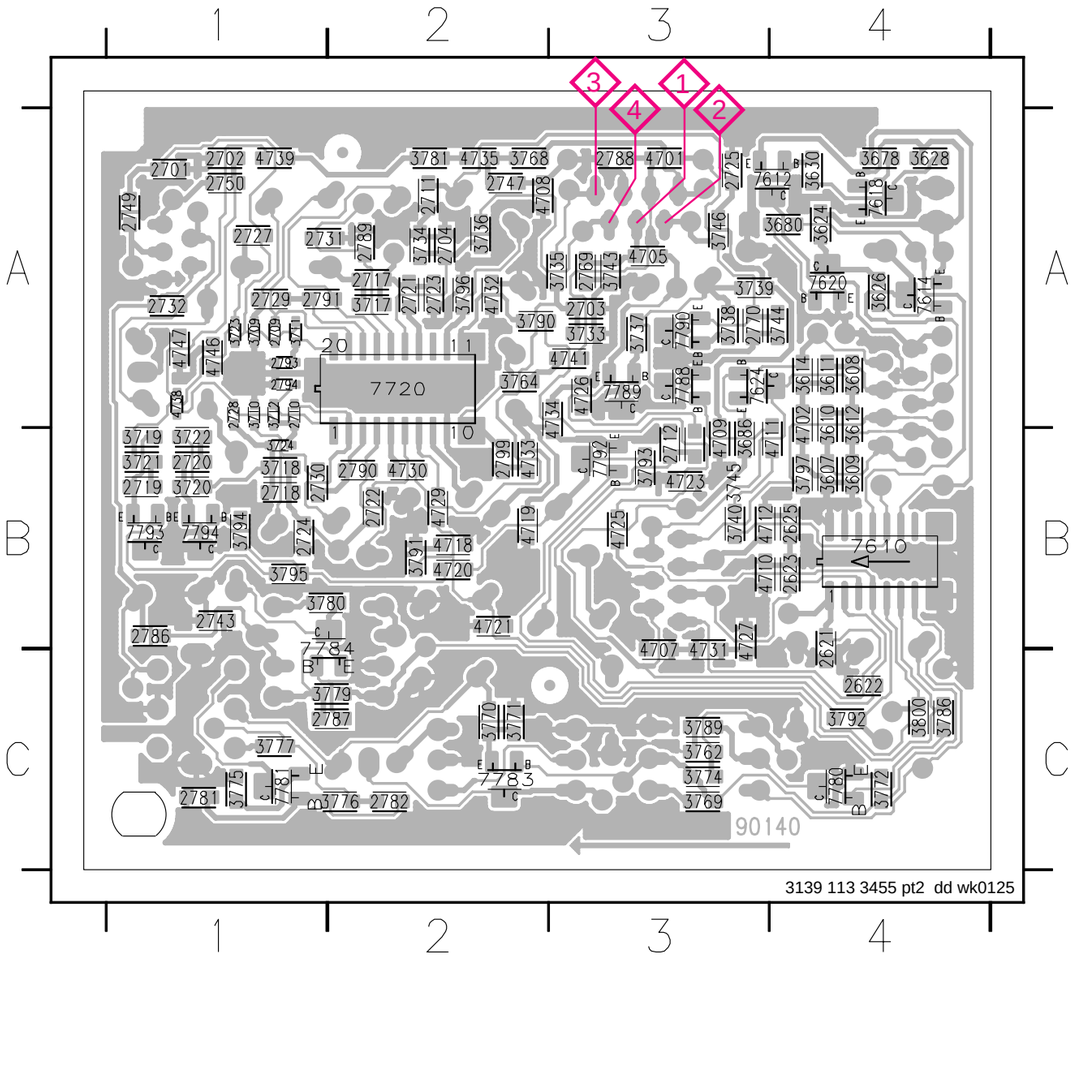

3139 113 3455 pt2 dd wk0125

TAPE ADJUSTMENT & CHECK TABLE

	TEST CASSETTE	RECORDER MODE	MEASURE ON	READ ON	ADJUST	
					with	to
MOTOR SPEED	SBC420 3150Hz	PLAY	1 or 2 LEFT RIGHT	frequency counter	check	3150Hz +/- 2%
WOW & FLUTTER	SBC420 3150Hz	PLAY		W&F-meter	check	< 0.4 % DIN
ADJUST AZIMUTH	SBC420 10kHz	PLAY FWD		mV-meter	left hand screw	max. output level & left=right
		PLAY REV ^			right hand screw	
PLAYBACK LEVEL & FREQ. RESPONSE	SBC420 315Hz	PLAY		mV-meter	check	125mV +/- 3dB (see fig.1 for freq. response)
CHECK RECORD/PLAYBACK FREQUENCY AND DISTORTION						
Inject 3mV signals 100Hz, 250Hz, 1kHz, 10kHz, 12.5kHz via 3 or 4	SBC419A or SBC420	RECORD				
	RECORDED CASSETTE	PLAY	1 or 2 LEFT RIGHT	mV-meter	check	limits see fig. 2 *
Inject 1kHz 8.85mV via 3 or 4	SBC419A or SBC420	RECORD				
	RECORDED CASSETTE	PLAY	1 or 2 LEFT RIGHT	THD-meter	check	< 3% *

SBC419A : 4822 397 30069
SBC420 : 4822 397 30071

^ For Auto-reverse version only
* If high frequencies are not within limits, decrease bias and re-measure.
If distortion is too high, increase bias and re-meaure

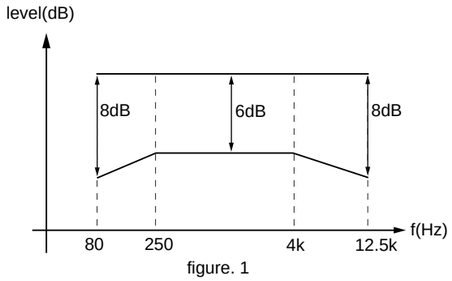

figure. 1

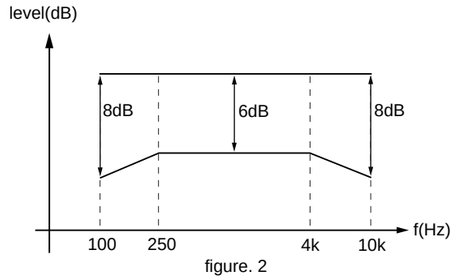

figure. 2

8 - 3

EXPLODED VIEW - TAPE MODULE

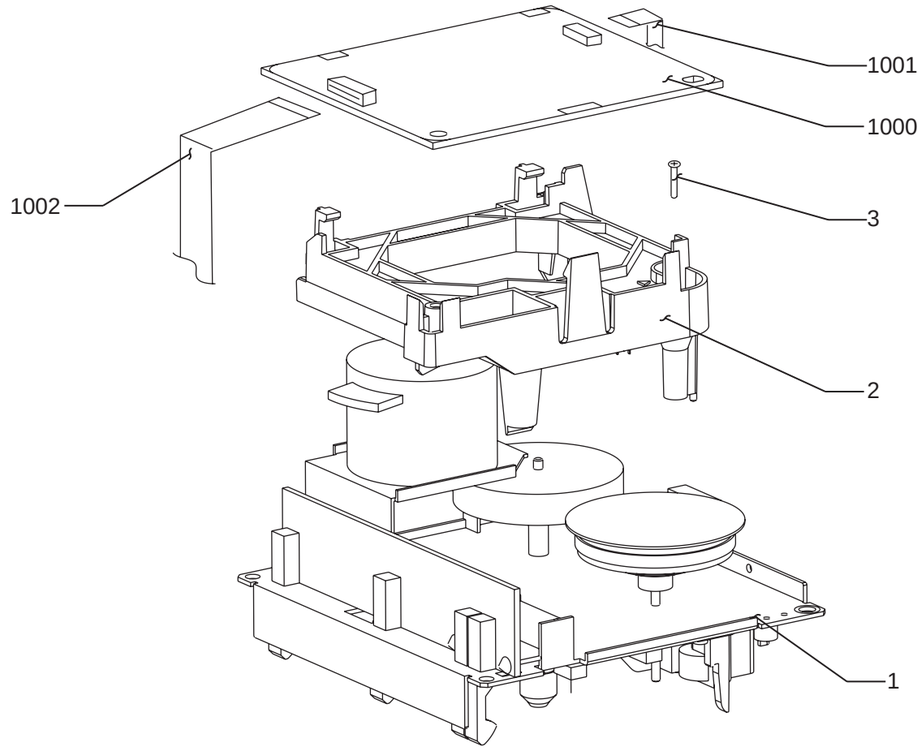

3139 118 78730_Module Tape Deck ETF8 SD dd wk0125

TAPE DECK WIRING

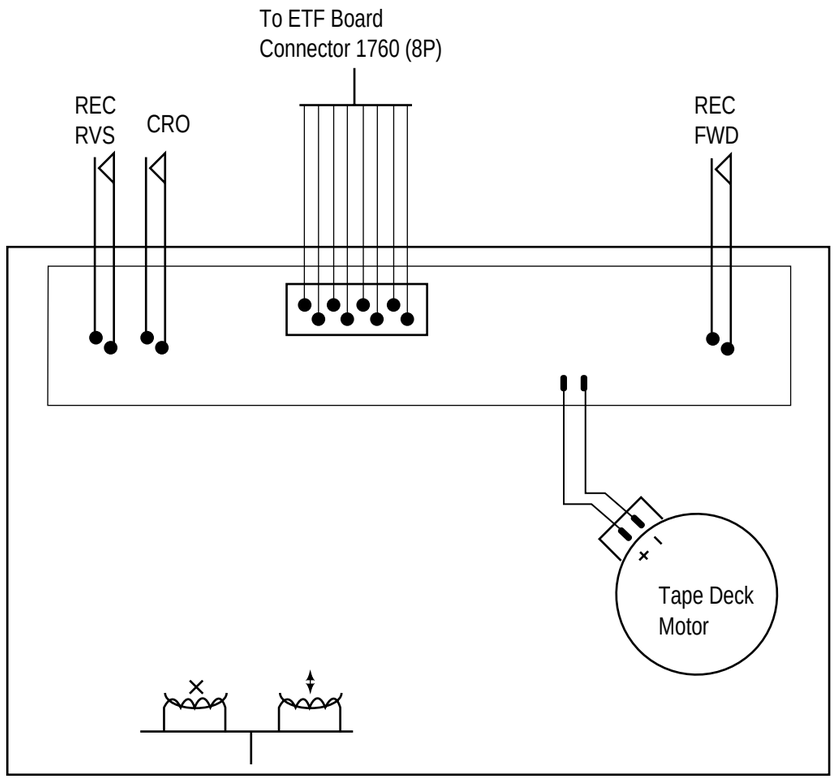

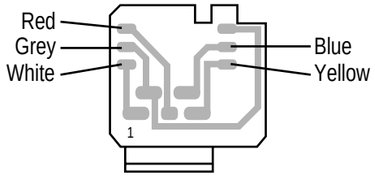

To ETF Board
Connector 1710 (5P)

8 - 4

TAPE MECHANISM ELECTRONICS

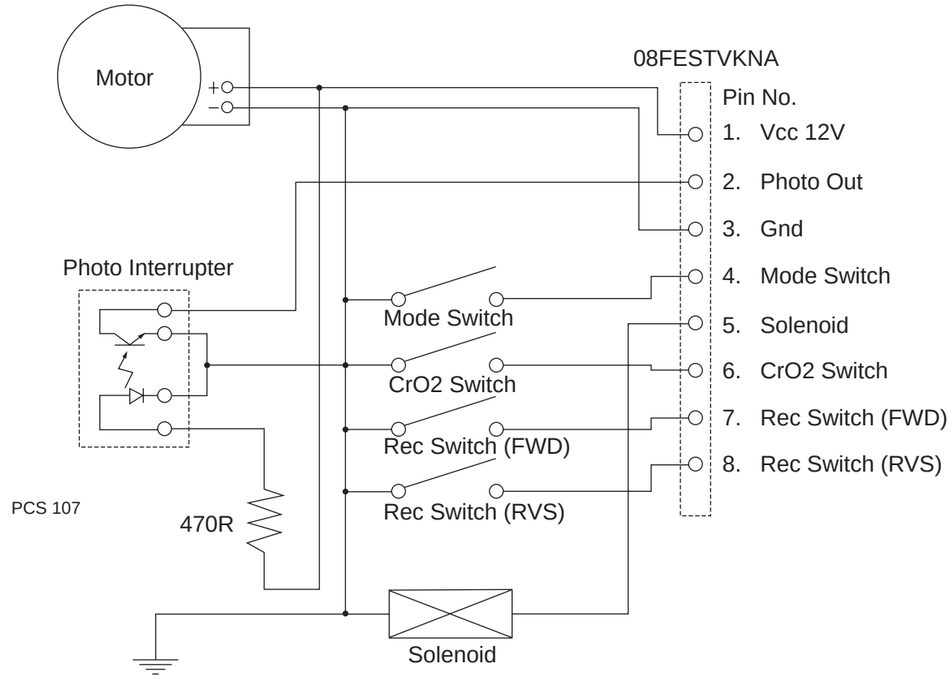

Mechanism Head Wires Soldering

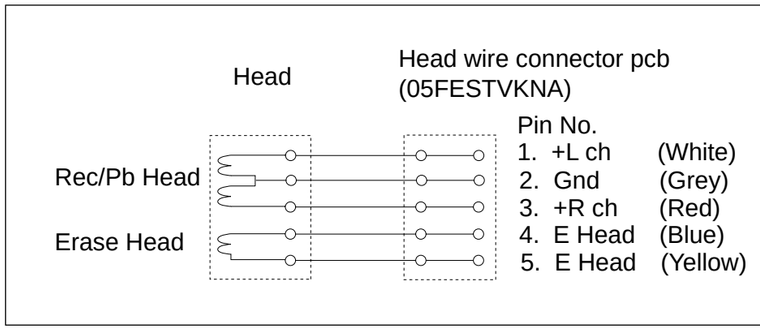

9 - 1

CIRCUIT DIAGRAM - CD99/ DA11 BOARD (Part 1)

1800 D1	2806 E4	2813 E9	2820 B10	2827 C14	2834 F5	2841 C1	2865 D5	2875 D5	3801 A1	3808 A2	3815 E5	3822 E7	3829 A11	3838 D14	3845 G12	3852 F5	3859 H5	3890 B4	3897 C5	7802-D E8	7808 E4
1801 G1	2807 E4	2814 E9	2821 B11	2828 C14	2835 F4	2842 F7	2869 E2	3728 A10	3802 B1	3809 A2	3816 E5	3823 E8	3830 B12	3839 D14	3846 F10	3853 F5	3860 H5	3891 C4	3898 C5	7802-E E7	7809 G4
2801 A2	2808 E4	2815 E10	2822 B11	2829 G14	2836 F4	2860 B5	2870 B5	3745 G12	3803 B1	3810 A3	3817 E7	3824 E9	3831 B14	3840 D15	3847 F6	3854 F5	3861 H5	3892 C4	3899 D5	7802-F F8	8401 H3
2802 A3	2809 E6	2816 F10	2823 B11	2830 F13	2837 G5	2861 B5	2871 B5	3750 G11	3804 B1	3811 E4	3818 E6	3825 E9	3832 B14	3841 E14	3848 F5	3855 F4	3862 H5	3893 D4	7800 D12	7803 B2	
2803 E4	2810 E6	2817 D9	2824 B11	2831 G12	2838 F5	2862 C5	2872 C5	3751 G11	3805 A1	3812 D5	3819 E6	3826 D10	3834 B14	3842 G14	3849 E5	3856 G6	3863 H4	3894 A5	7802-A E6	7804 -A A1	
2804 E4	2811 F7	2818 D9	2825 B12	2832 F5	2839 H4	2863 C5	2873 C5	3757 G5	3806 B2	3813 E5	3820 E7	3827 D9	3835 C14	3843 G13	3850 F5	3857 G5	3864 C1	3895 B5	7802-B E5	7804 -B C3	
2805 E4	2812 E8	2819 B10	2826 A13	2833 F4	2840 H4	2864 D5	2874 D5	3800 B2	3807 A2	3814 E5	3821 E7	3828 A10	3837 C14	3844 G13	3851 F6	3858 G5	3865 F7	3896 B5	7802-C E5	7807 E6	

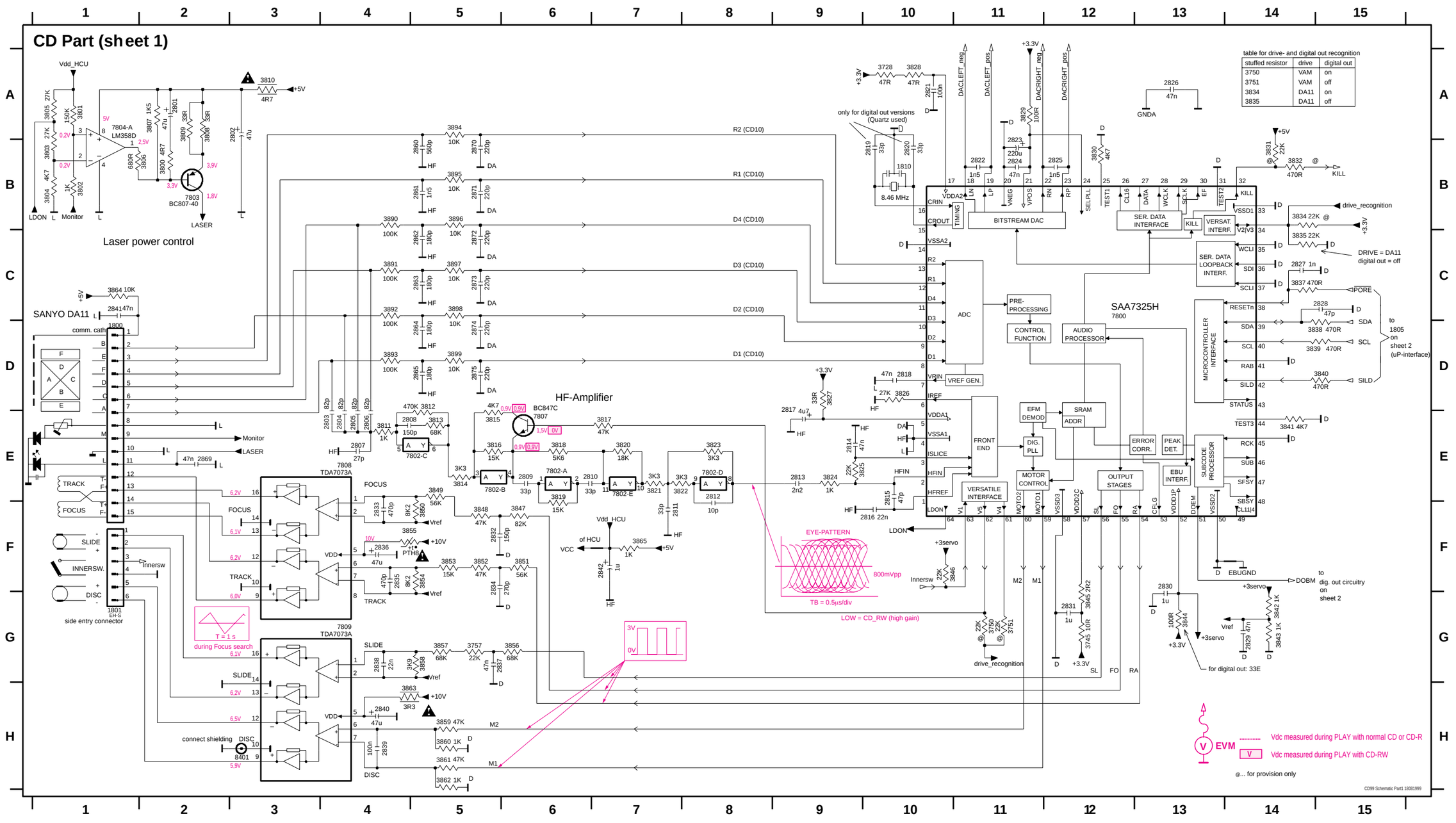

9 - 2

LAYOUT DIAGRAM - CD99/ DA11 BOARD

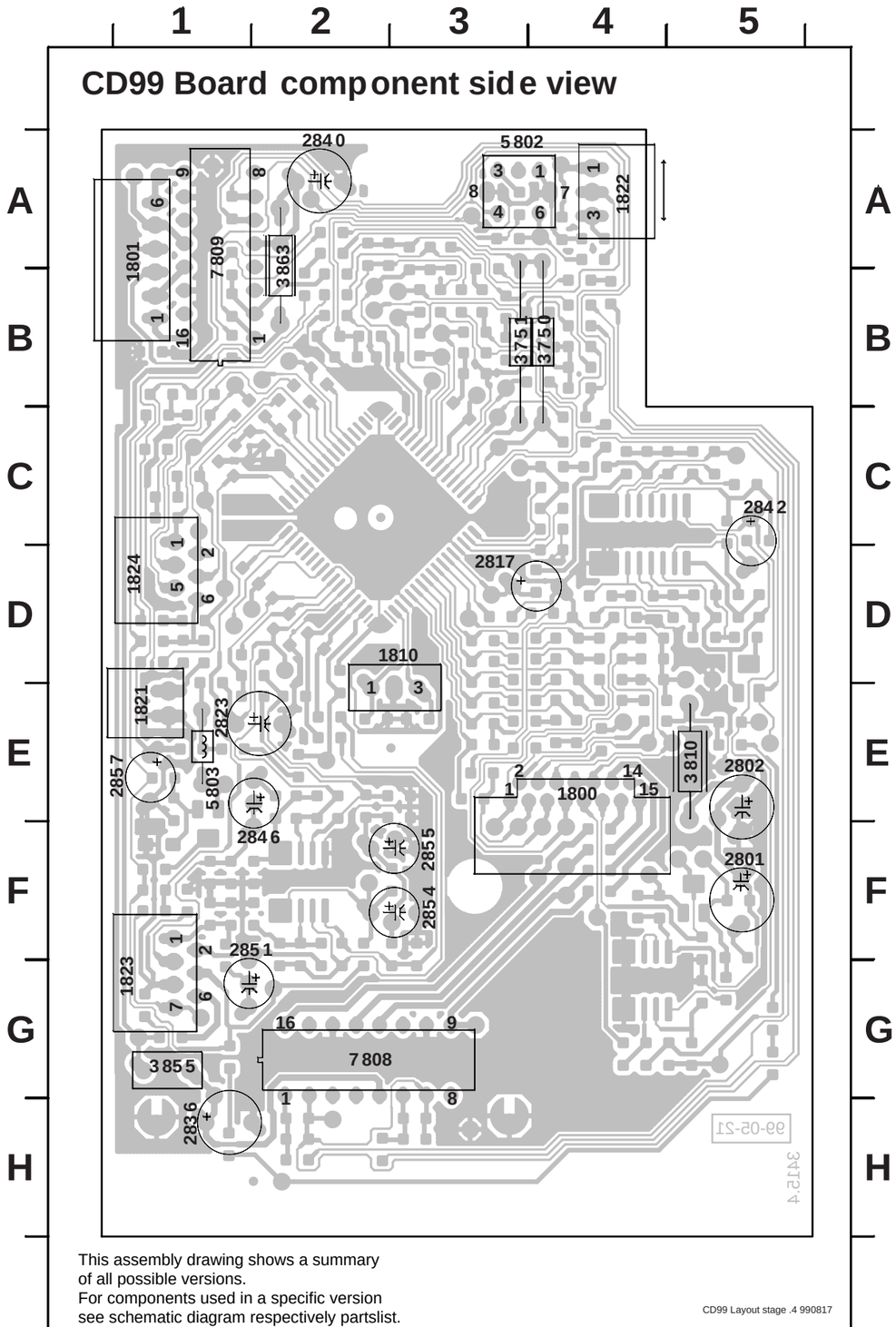

1800	F2	3703	B5	3876	F4
1801	A5	3704	A2	3877	F4
1810	D3	3705	A3	3878	F4
1821	E5	3728	E5	3879	F5
1822	A2	3745	B3	3880	F5
1823	G5	3750	B2	3881	E5
1824	D5	3751	B2	3882	F4
2701	B4	3757	B3	3883	F3
2702	A2	3788	C5	3884	E3
2703	A2	3800	F1	3885	B5
2704	A2	3801	G2	3886	C5
2801	F1	3802	G2	3887	B5
2802	E1	3803	G1	3888	C5
2803	D2	3804	G1	3889	D5
2804	D2	3805	G1	3890	D2
2805	D2	3806	G1	3891	E2
2806	E1	3807	F1	3892	D2
2807	D2	3808	F2	3893	D2
2808	D2	3809	F1	3894	E3
2809	D1	3810	E1	3895	E2
2810	C1	3811	D1	3896	E2
2811	C2	3812	D1	3897	D2
2812	C1	3813	D2	3898	D2
2813	C2	3814	D1	3899	D2
2814	D2	3815	D1	3900	D4
2815	C2	3816	D1	4801	E5
2816	C2	3817	C2	4802	F2
2817	D2	3818	C1	4804	D4
2818	D2	3819	D1	4805	E4
2819	E4	3820	C1	4806	D5
2820	E3	3821	C1	4807	E2
2821	D4	3822	C1	4808	D5
2822	D4	3823	C2	4809	D5
2823	E4	3824	C2	4810	B2
2824	D4	3825	C2	4812	B4
2825	D4	3826	D3	4813	B3
2826	F5	3827	D2	4814	B3
2827	C5	3828	E4	4815	A4
2828	C4	3829	D5	4823	C2
2829	A4	3830	D4	4824	B2
2830	B3	3831	F5	4828	B2
2831	B3	3832	F5	4831	B3
2832	B2	3834	D5	4832	B3
2833	H4	3835	C4	4838	C5
2834	B2	3836	C5	4845	D2
2835	H3	3837	C4	4847	E1
2836	G5	3838	C4	4848	B4
2837	B2	3839	C4	4850	G5
2838	B5	3840	B4	4853	F2
2839	A5	3841	B4	4856	F5
2840	A4	3842	A3	4857	B4
2841	E2	3843	A3	4859	B5
2842	C1	3844	A3	4863	C5
2843	E4	3845	C3	4865	A4
2844	E3	3846	A3	4866	B4
2845	E4	3847	B3	4872	F2
2846	E4	3848	B2	4877	H5
2847	F5	3849	H4	4881	G5
2848	F4	3850	H4	4884	E2
2849	F3	3851	B3	4885	G5
2850	F4	3852	B2	4886	G1
2851	G4	3853	H3	4888	F2
2852	F5	3854	H3	4889	G1
2853	E5	3855	G5	5802	A2
2854	F3	3856	B3	5803	E5
2855	E3	3857	B3	6877	F5
2856	D5	3858	A5	7800	C4
2857	E5	3859	C2	7802	C2
2860	E3	3860	B2	7803	F1
2861	E2	3861	B2	7804	G2
2862	E2	3862	B2	7807	D1
2863	D2	3863	A4	7808	G4
2864	D2	3864	E1	7809	A5
2865	D2	3865	E1	7810	F4
2869	F1	3867	E4	7875	F5
2870	E3	3868	E4	8401	H3
2871	E3	3869	E4	8402	H5
2872	E3	3870	F4		
2873	D3	3871	E4		
2874	D3	3872	F5		
2875	D3	3873	E4		
3701	B4	3874	E4		
3702	B4	3875	F3		

This assembly drawing shows a summary
of all possible versions.
For components used in a specific version
see schematic diagram respectively partslist.

CD99 Layout stage .4 990817

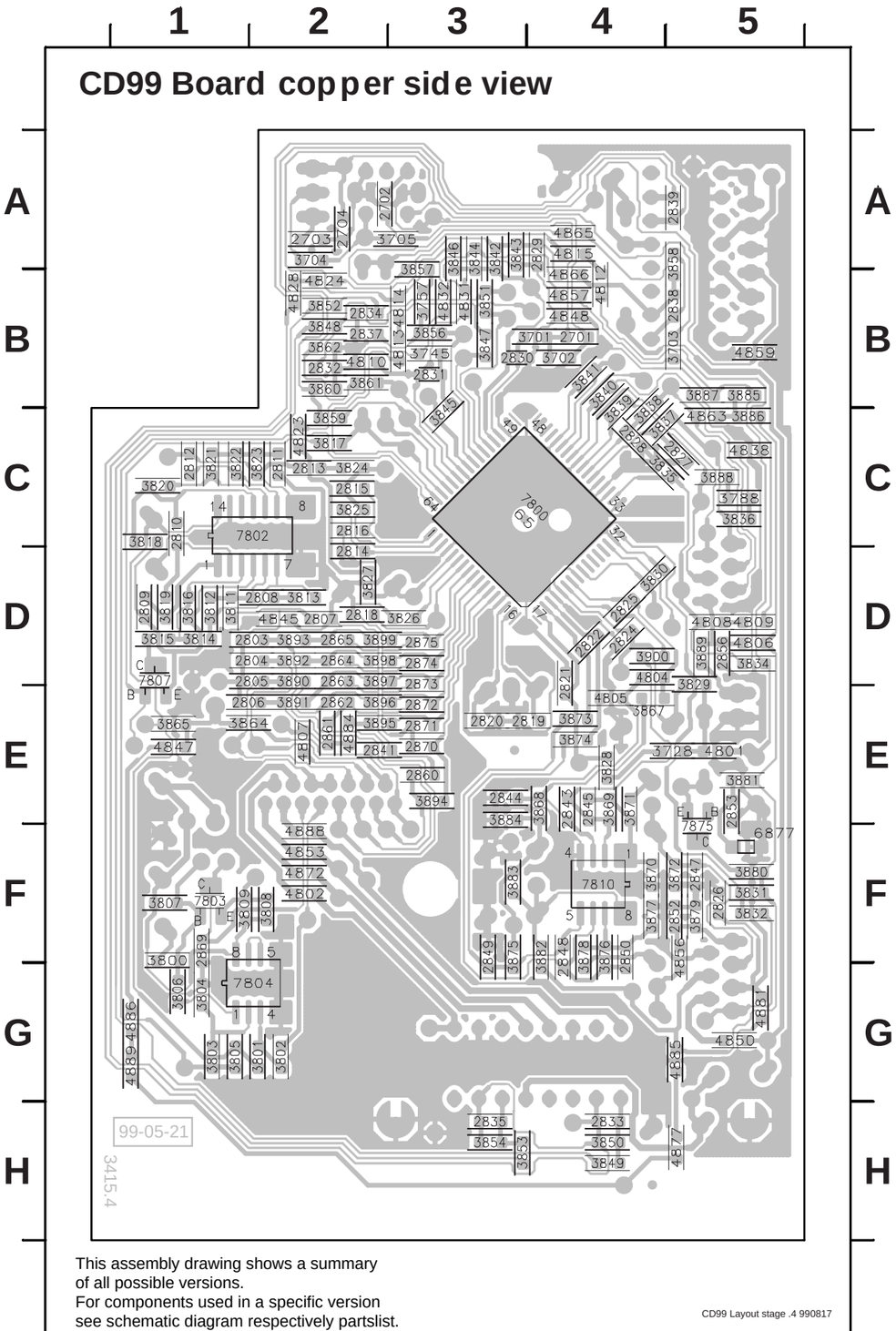

This assembly drawing shows a summary
of all possible versions.
For components used in a specific version
see schematic diagram respectively partslist.

CD99 Layout stage .4 990817

9 - 3

CIRCUIT DIAGRAM - CD99/ DA11 BOARD (Part 2)

1821 D10 1822 E4 1823 B10 1824 D10 2701 E2 | 2702 E2 2703 E4 2704 E3 2843 A5 2844 A5 | 2845 A6 2846 A7 2847 A8 2848 C5 2849 C5 | 2850 B6 2851 C7 2852 C8 2853 E6 2854 D6 | 2855 D6 2856 E10 2857 E6 3701 E1 3702 E2 | 3703 D3 3704 E4 3705 D3 3788 E9 3836 D10 | 3867 A5 3868 A5 3869 A6 3870 A6 3871 A7 | 3872 A8 3873 C5 3874 C5 3875 C5 3876 B6 | 3877 C6 3878 C7 3879 C8 3880 E7 3881 E7 | 3882 D7 3883 D6 3884 D6 3885 E8 3886 E8 | 3887 E9 3888 E9 3889 E10 3900 A5 4804 A4 | 4805 C4 4806 E9 5802 D3 5803 E6 6877 E7 | 7810-A A5 7810-B C5 7875 E7 8402 C9

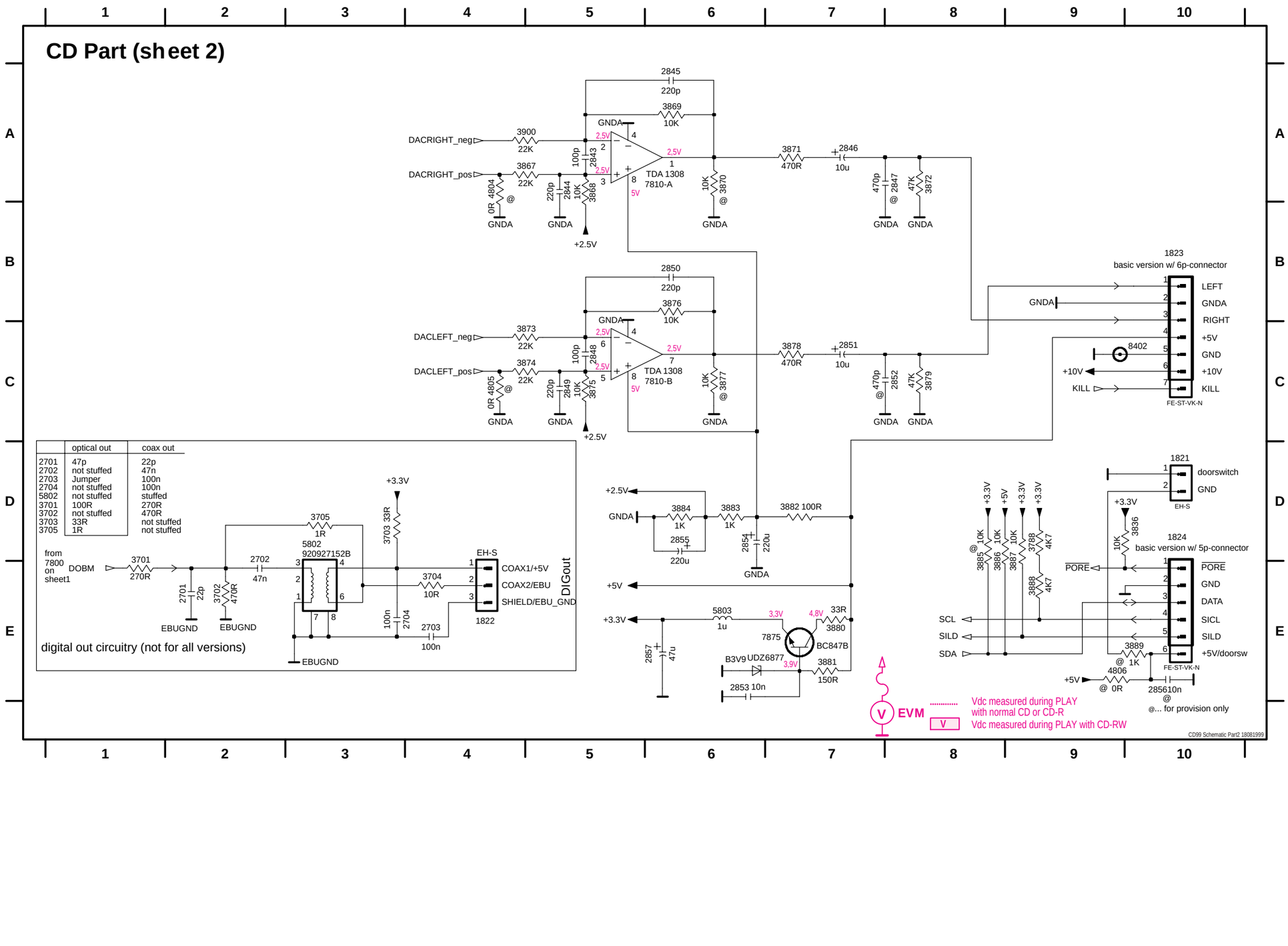

CIRCUIT DIAGRAM - POWER BOARD

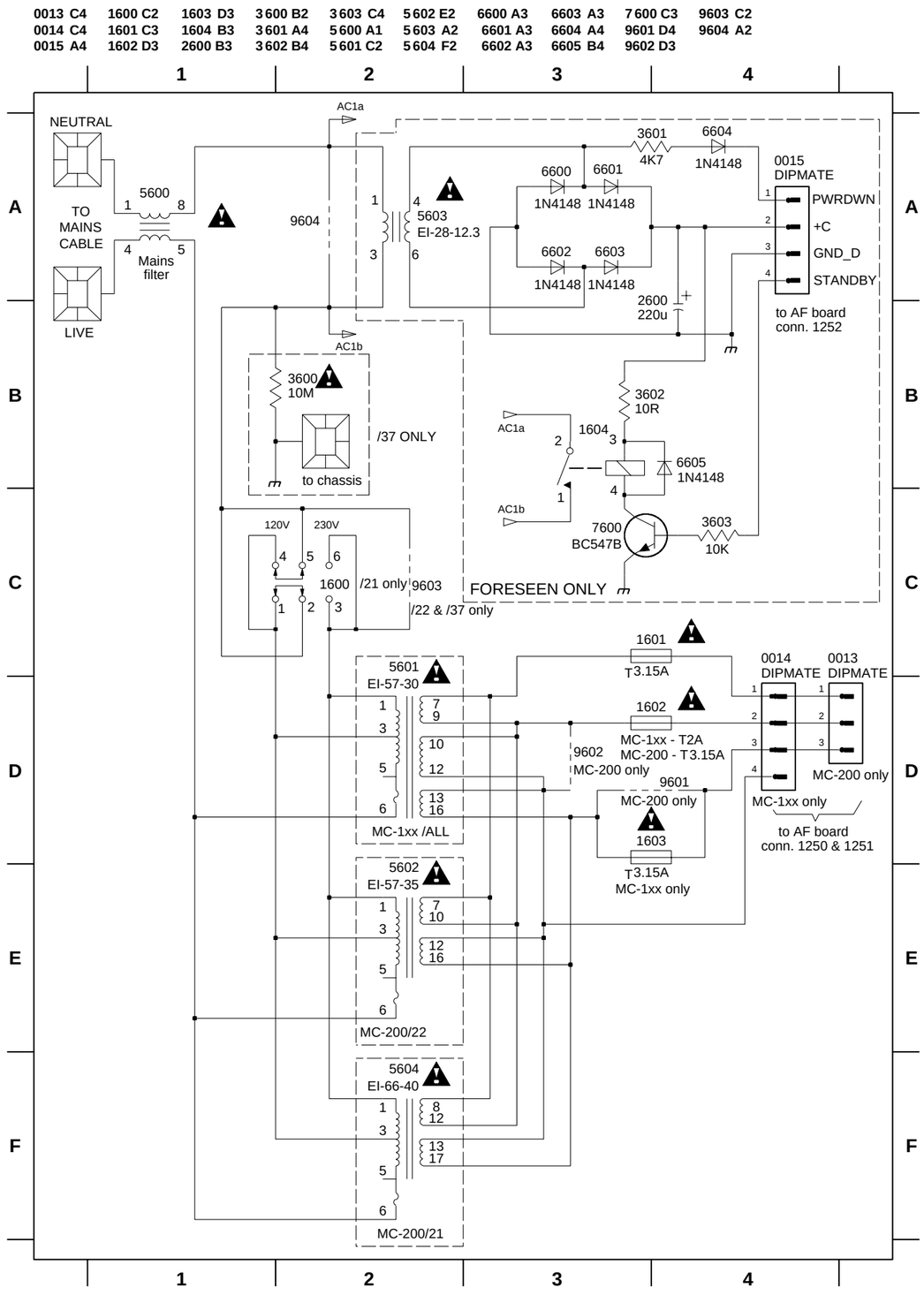

LAYOUT DIAGRAM - POWER BOARD

0000 A9	0015 E1	1604 D4	3603 C1	5604 D4	6604 E3	9602 E6
0001 A9	1600 B2	2600 E2	5600 C4	6600 E2	6605 D4	9603 B2
0002 A9	1601 E5	3600 D1	5601 C5	6601 E1	7600 D1	9604 C2
0013 D4	1602 E6	3601 E3	5602 C5	6602 E1	9600 B3	
0014 E4	1603 E8	3602 E3	5603 C2	6603 E1	9601 E7	

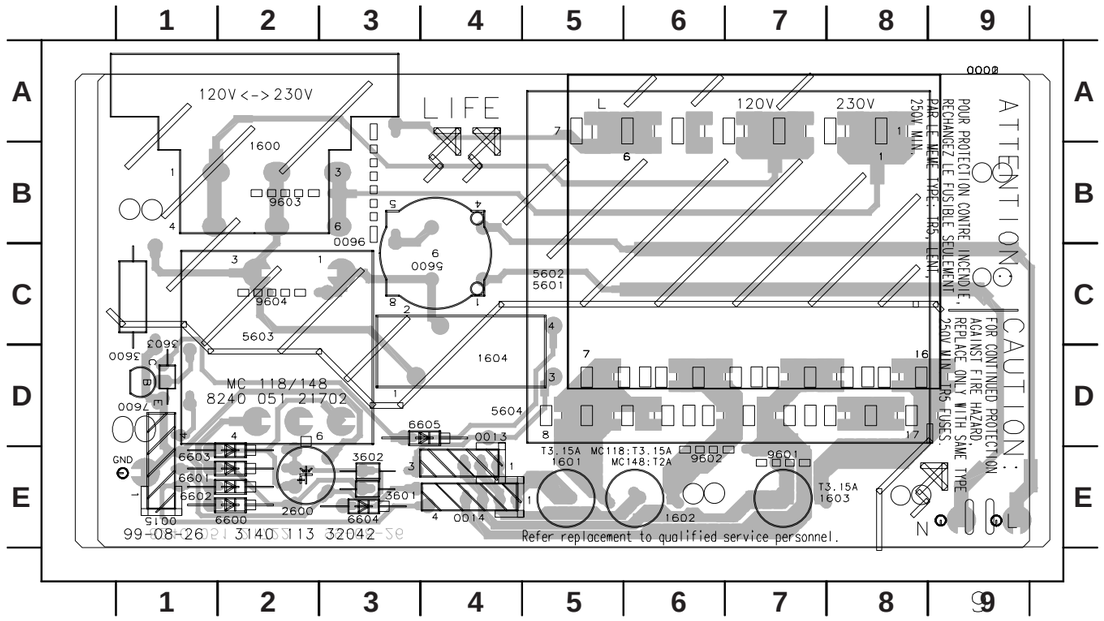

11 - 1

CIRCUIT DIAGRAM - FRONT BOARD

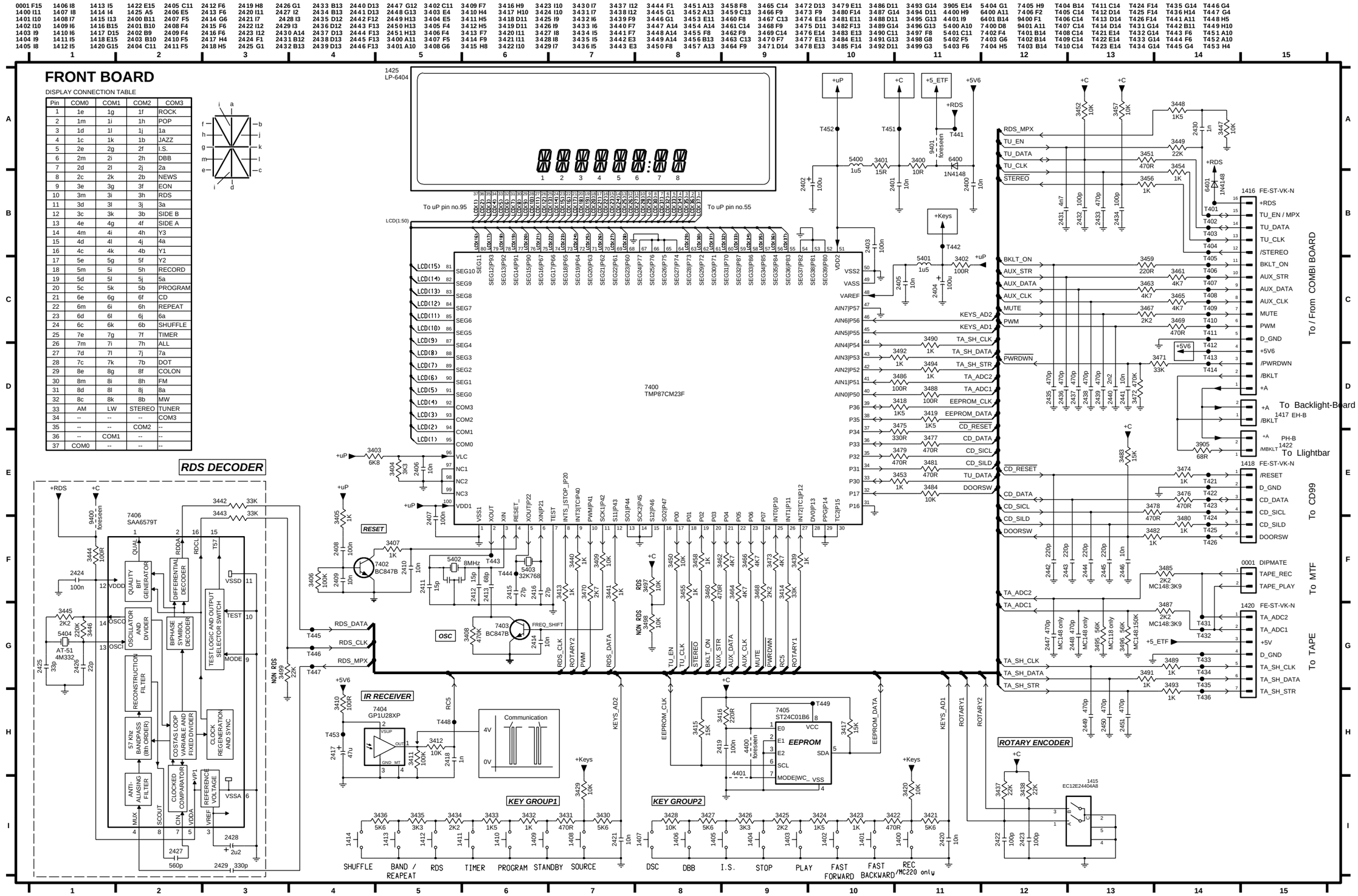

DISPLAY CONNECTION TABLE

Pin	COM0	COM1	COM2	COM3
1	1e	1g	1f	ROCK
2	1m	1i	1h	POP
3	1d	1l	1j	1a
4	1c	1k	1b	JAZZ
5	2e	2g	2f	I.S.
6	2m	2i	2h	DBB
7	2d	2l	2j	2a
8	2c	2k	2b	NEWS
9	3e	3g	3f	EON
10	3m	3i	3h	RDS
11	3d	3l	3j	3a
12	3c	3k	3b	SIDE B
13	4e	4g	4f	SIDE A
14	4m	4i	4h	Y3
15	4d	4l	4j	4a
16	4c	4k	4b	Y1
17	5e	5g	5f	Y2
18	5m	5i	5h	RECORD
19	5d	5l	5j	5a
20	5c	5k	5b	PROGRAM
21	6e	6g	6f	CD
22	6m	6i	6h	REPEAT
23	6d	6l	6j	6a
24	6c	6k	6b	SHUFFLE
25	7e	7g	7f	TIMER
26	7m	7i	7h	ALL
27	7d	7l	7j	7a
28	7c	7k	7b	DOT
29	8e	8g	8f	COLON
30	8m	8i	8h	FM
31	8d	8l	8j	8a
32	8c	8k	8b	MW
33	AM	LW	STEREO	TUNER
34	--	--	--	COM3
35	--	--	COM2	--
36	--	COM1	--	--
37	COM0	--	--	--

11 - 2

LAYOUT DIAGRAM- FRONT BOARD
COPPER SIDE VIEW

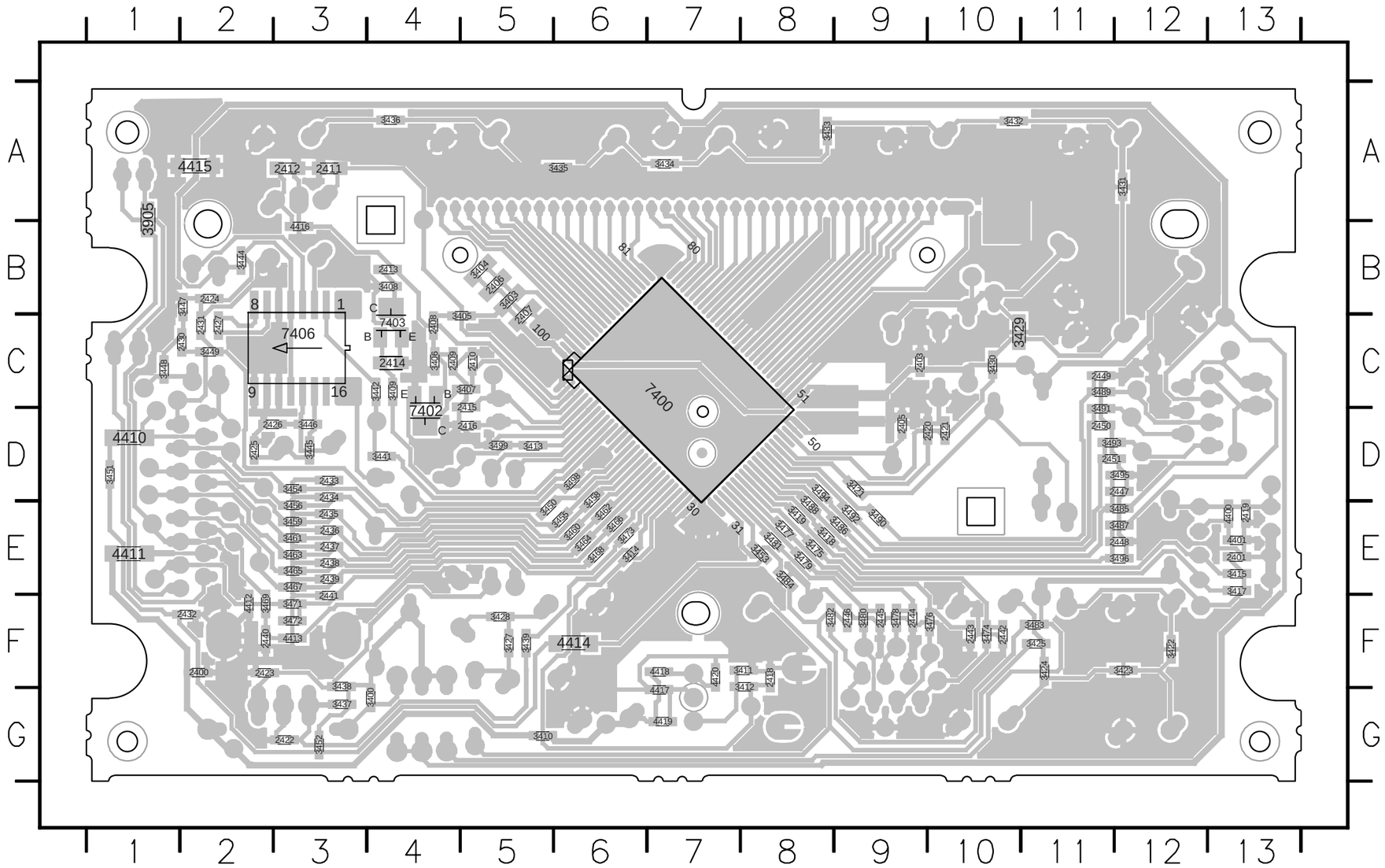

2400	F2	3407	C5	3465	E3
2401	E13	3408	B4	3466	E6
2403	C9	3409	C4	3467	E3
2405	D9	3410	G5	3468	E6
2406	B5	3411	F8	3469	F2
2407	C5	3412	F8	3471	F3
2408	C4	3413	D5	3472	F3
2409	C4	3414	E6	3473	E6
2410	C5	3415	E13	3474	F10
2411	A3	3417	E13	3475	E8
2412	A3	3418	E8	3476	F10
2413	B4	3419	E8	3477	E8
2414	C4	3421	D9	3478	F9
2415	C5	3422	F12	3479	E8
2416	D5	3423	F12	3480	F9
2418	F8	3424	F11	3481	E8
2419	E13	3425	F11	3482	F8
2420	D10	3427	F5	3483	F11
2421	D10	3428	F5	3484	E8
2422	G3	3429	C10	3485	E12
2423	F2	3430	C10	3486	E9
2424	B2	3431	A12	3487	E12
2425	D2	3432	A10	3488	E8
2426	D2	3433	A8	3489	C11
2427	C2	3434	A7	3490	E9
2430	C2	3435	A6	3491	D11
2431	C2	3436	A4	3492	E9
2432	F2	3437	G3	3493	D11
2433	D3	3438	F3	3494	D8
2434	D3	3439	F5	3495	D12
2435	E3	3441	D4	3496	E12
2436	E3	3442	C4	3498	D6
2437	E3	3444	B2	3499	D5
2438	E3	3445	D3	3905	B1
2439	E3	3446	D3	4400	E13
2440	F2	3447	B2	4401	E13
2441	F3	3448	C1	4410	D1
2442	F10	3449	C2	4411	E1
2443	F10	3450	E5	4412	F2
2444	F9	3451	D1	4413	F3
2445	F9	3452	G3	4414	F6
2446	F9	3453	E8	4415	A2
2447	D12	3454	D3	4416	B3
2448	E12	3455	E6	4417	G7
2449	C11	3456	E3	4418	F7
2450	D11	3458	D6	4419	G7
2451	D11	3459	E3	4420	F7
3400	G4	3460	E6	7400	C7
3403	B5	3461	E3	7402	D4
3404	B5	3462	E6	7403	C4
3405	C5	3463	E3	7406	C3
3406	C4	3464	E6		

11 - 3

LAYOUT DIAGRAM - FRONT BOARD
COMPONENT SIDE VIEW

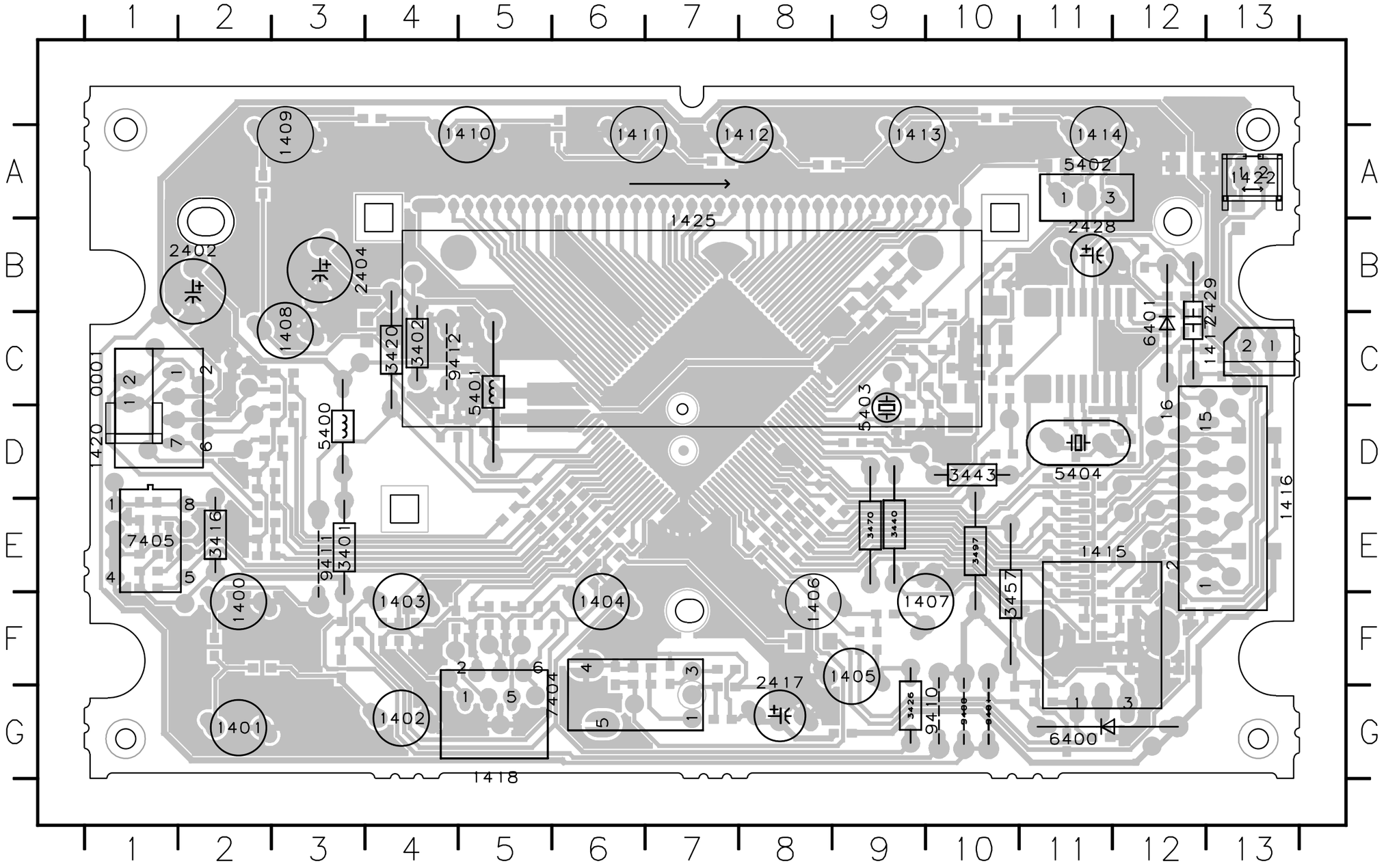

0001 C1
1400 F2
1401 G2
1402 G4
1403 F4
1404 F6
1405 F9
1406 F8
1407 F9
1408 C3
1409 A3
1410 A5
1411 A6
1412 A8
1413 A9
1414 A11
1415 E11
1416 E13
1417 C13
1418 G5
1420 D1
1422 A13
1425 B7
2402 B2
2404 B3
2417 F8
2428 B11
2429 B13
3401 E3
3402 C4
3416 E2
3420 C4
3426 G9
3440 E9
3443 D10
3457 F10
3470 E9
3497 E10
5400 D3
5401 C5
5402 A11
5403 D9
5404 D11
6400 G11
6401 C12
7404 G6
7405 E1
9400 G10
9401 G10
9410 G10
9411 E3
9412 C4

12 - 1

CIRCUIT DIAGRAM - COMBI BOARD (PART 1)

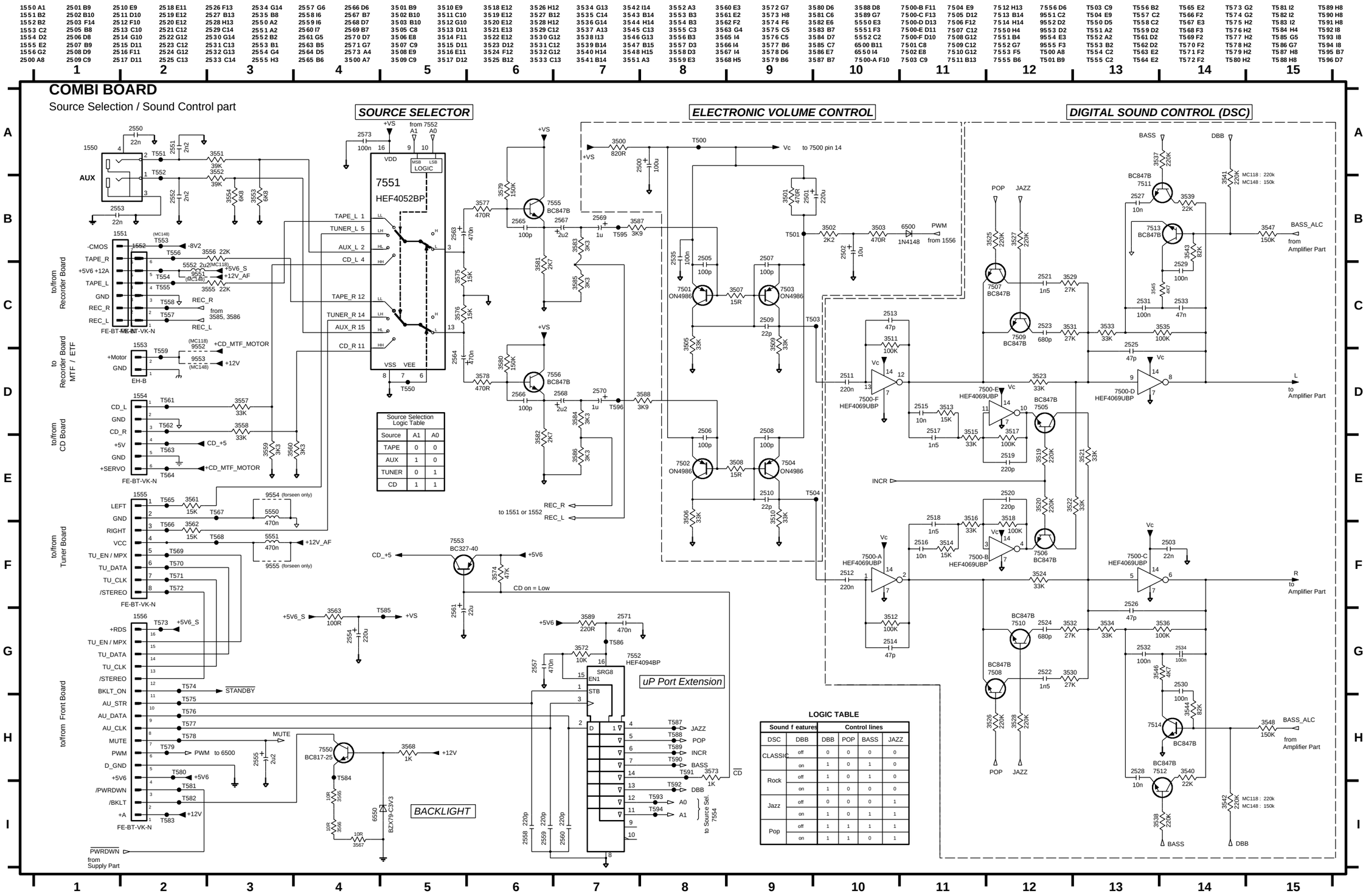

12 - 2

CIRCUIT DIAGRAM - COMBI BOARD (PART 2)

1330 A12 1331-A D13 2330 B7 2331 E4 2332 D4 2333 E5 2334 C5 2335 E5 2336 D5 2337 E9 2338 D9 2339 F9 2340 C9 2341 A10 2342 B10 2343 A11 2344 B11 2345 D12 2346 E12 2347 F10 2348 F10 2349 G9 2350 F5 2351 B5 2352 H5 2353 G6 2354 G7 2355 B7 3330 F5 3331 E4 3332 D4 3333 E4 3334 D4 3335 E9 3336 D9 3337 E9 3338 C9 3339 A10 3340 B10 3341 A11 3342 B11 3343 E8 3344 D8 3345 E8 3346 C8 3347 F7 3348 F6 3349 G7 3350 H7 3351 G11 3352 G11 3353 G10 3354 B4 3356 B5 3358 B5 3359 H5 3360 H5 3361 H5 3362 B7 3363 B7 3364 B8 3365 B8 4333 E5 4334 D5 4335 A4 5331 E9 5332 D9 5333 E9 5334 C9 6331 G10 6332 G10 6333 H4 6334 B8 7330 C6 7331 G7 7332 G6 9330 A7 7333 H6 7334 B4 9330 B7 T330 B6 T331 H5 T332 C6 T333 C7 T334 G6 T335 G6 T336 G6 T337 A11 T338 G9 T339 D12 T340 E12 T341 D12 T342 D12 T343 E3 T344 D3

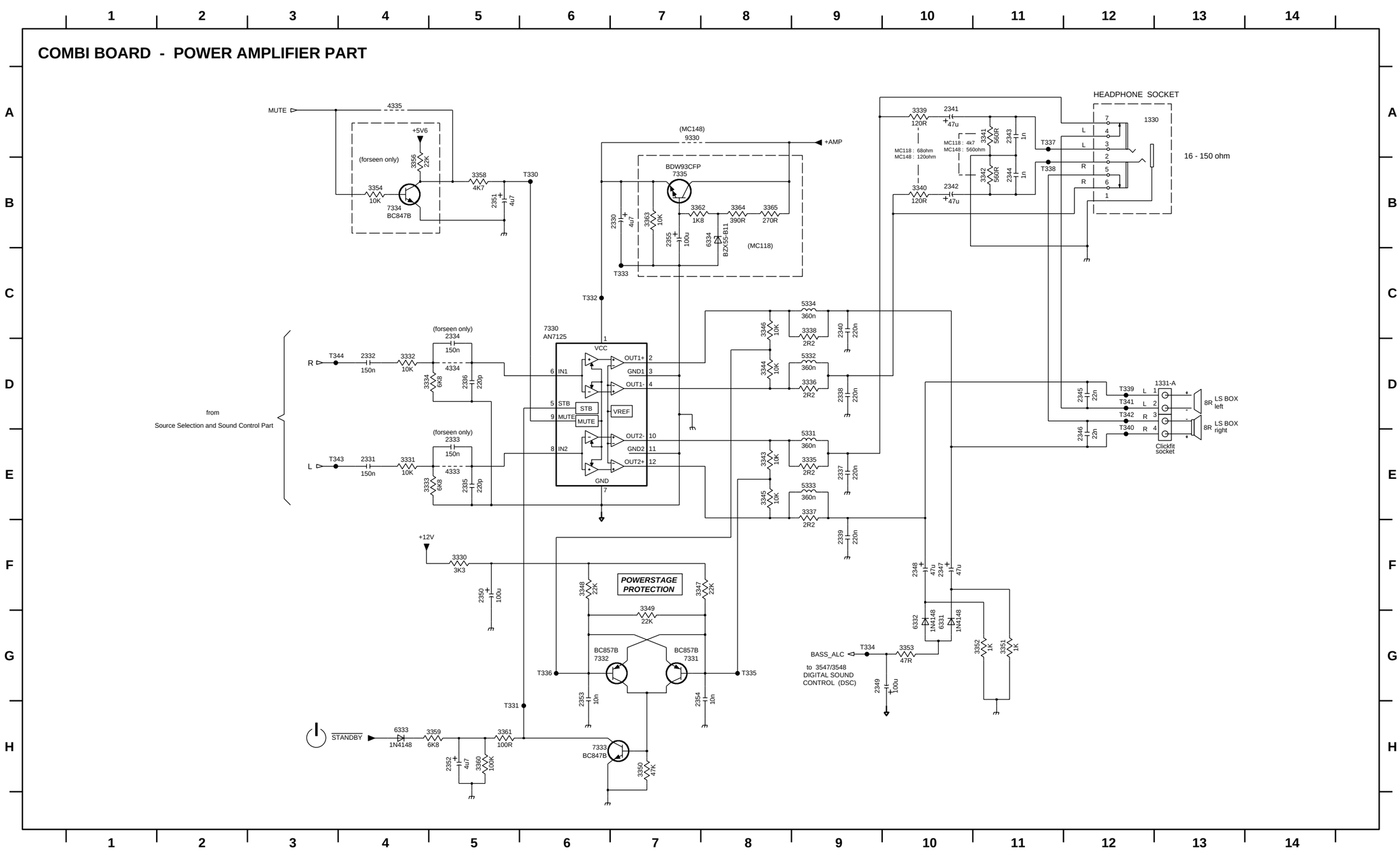

12 - 3

CIRCUIT DIAGRAM - COMBI BOARD (PART 3)

0250 E8 2250 D4 2254 D8 2258 F3 2262 C11 2266 A10 3251 A6 3255 B10 3259 C11 3263 C10 3267 E12 3271 F10 3275 F11 3279 H13 3283 B12 6251 C3 6255 C6 6259 C7 6263 D7 6267 B5 6271 G5 6275 G12 7253 B13 7257 G11 7261 H13 9254 D13 T251 D2 T255 D8 T259 H3 T263 G13
1250 C1 2251 C5 2255 D8 2259 F4 2263 B13 2267 D4 3252 G3 3256 B10 3260 C11 3264 C13 3268 E12 3272 G10 3276 G12 3280 H14 3284 B12 6252 D3 6256 C6 6260 D6 6264 D7 6268 A6 6272 B11 7250 A10 7254 D12 7258 G10 9251 C4 9255 G9 T252 D2 T256 E4 T260 H3 T264 G14
1252 H2 2253 D5 2257 A5 2261 A10 2265 C13 3250 A4 3254 G5 3258 B11 3262 C12 3266 D12 3270 G8 3274 H10 3278 G13 3282 B12 6250 C3 6254 C5 6258 C7 6262 D6 6266 A5 6270 G4 6274 G9 7252 C11 7256 F11 7260 G13 9253 D3 T250 C2 T254 D4 T258 H3 T262 D13

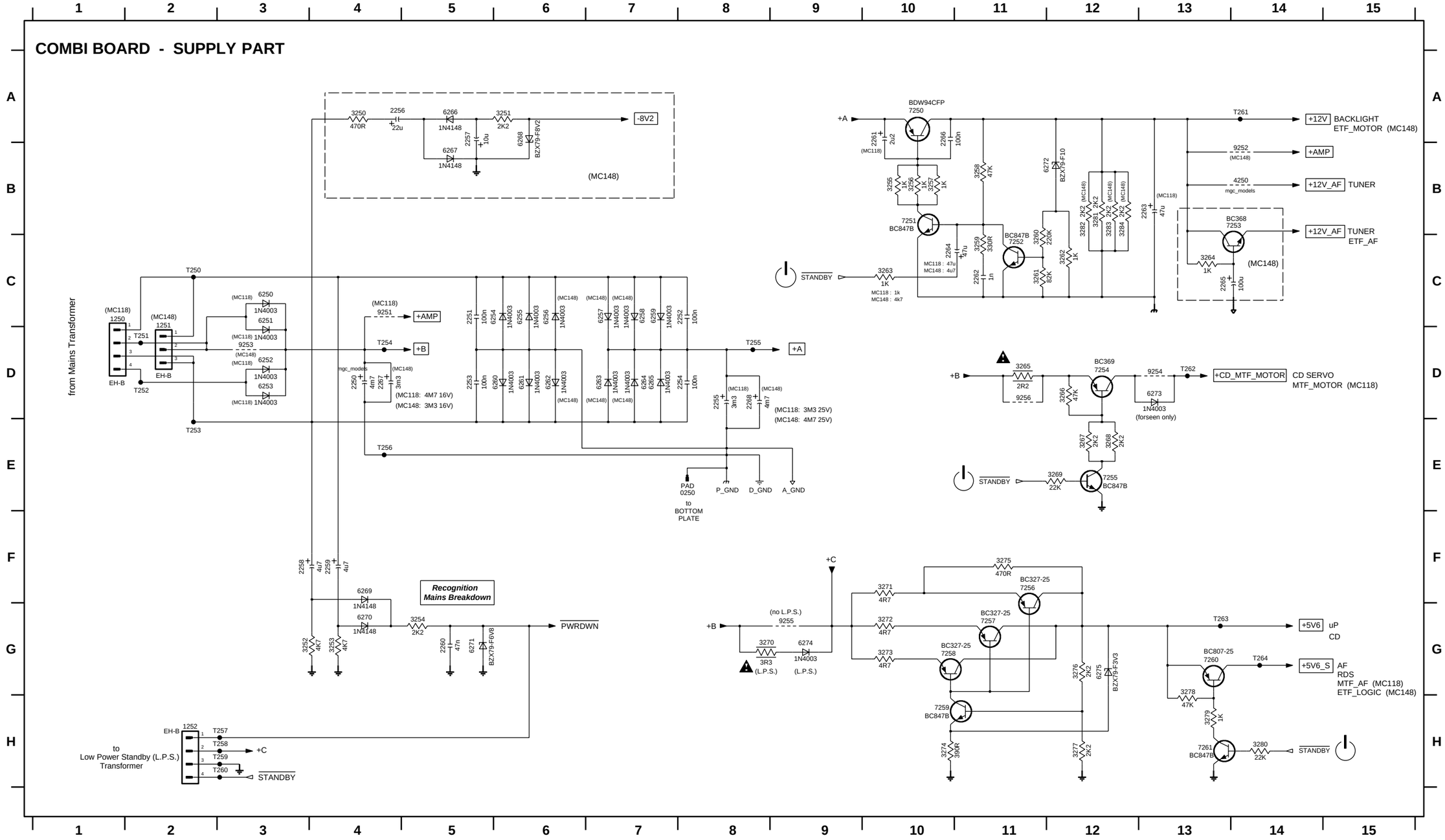

12 - 4

LAYOUT DIAGRAM - COMBI BOARD
COPPER SIDE VIEW

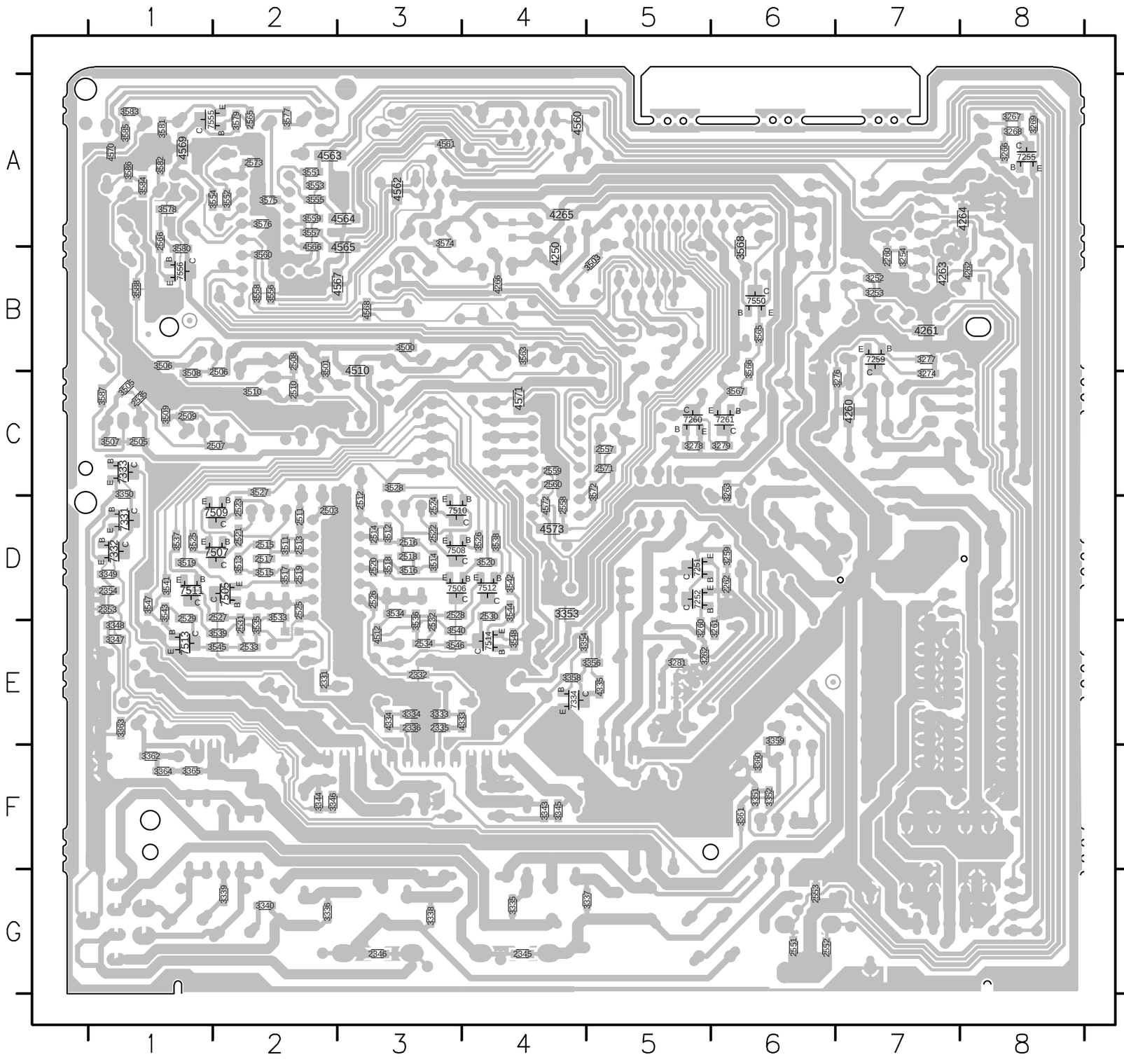

2260	B7	3276	C7	3545	E2	7334	E4
2262	D6	3277	B7	3546	E3	7505	D2
2266	E5	3278	C5	3547	D1	7506	D3
2331	E2	3279	C6	3548	E4	7507	D2
2332	E3	3281	E5	3551	A2	7508	D3
2333	E4	3282	E5	3552	A2	7509	D2
2334	E3	3283	E5	3553	A2	7510	D3
2335	E3	3284	E5	3554	A2	7511	D1
2336	E3	3333	E3	3555	A2	7512	D4
2345	G4	3334	E3	3556	B2	7513	E1
2346	G3	3335	G4	3557	A2	7514	E4
2353	D1	3336	G2	3558	B2	7550	B6
2354	D1	3337	G5	3559	A2	7555	A1
2503	D2	3338	G3	3560	B2	7556	B1
2505	C1	3339	G2	3563	B4		
2506	C2	3340	G2	3565	B6		
2507	C2	3343	F4	3566	B6		
2508	B2	3344	F2	3567	C6		
2509	C1	3345	F4	3568	B6		
2510	C2	3346	F2	3572	C5		
2511	D2	3347	E1	3574	A3		
2512	D3	3348	E1	3575	A2		
2513	D2	3349	D1	3576	A2		
2514	D3	3350	C1	3577	A2		
2515	D2	3351	F6	3578	A1		
2516	D3	3352	F6	3579	A2		
2517	D2	3353	D4	3580	B1		
2518	D3	3354	E4	3581	A1		
2519	D2	3356	E5	3582	A1		
2520	D3	3358	E4	3583	A1		
2521	D2	3359	E6	3584	A1		
2522	D3	3360	F6	3585	A1		
2523	D2	3361	F6	3586	A1		
2524	D3	3362	F1	3587	C1		
2525	D2	3363	E1	3588	B1		
2526	D3	3364	F1	4250	B4		
2527	D2	3365	F1	4260	C7		
2528	D3	3500	B3	4261	B7		
2529	D1	3501	B2	4262	B8		
2530	D4	3503	B5	4263	B7		
2531	E2	3505	C1	4264	A8		
2532	E3	3506	B1	4265	A4		
2533	E2	3507	C1	4266	B4		
2534	E3	3508	C1	4333	E4		
2535	C1	3509	C1	4334	E3		
2551	G6	3510	C2	4335	E5		
2552	G6	3511	D2	4510	B3		
2553	G6	3512	D3	4512	E3		
2557	C5	3513	D2	4513	E2		
2558	D4	3514	D3	4560	A4		
2559	C4	3515	D2	4561	A3		
2560	C4	3516	D3	4562	A3		
2565	A2	3517	D2	4563	A2		
2566	A1	3518	D3	4564	A3		
2571	C5	3519	D1	4565	B3		
2573	A2	3520	D4	4566	A2		
3250	B8	3525	D1	4567	B3		
3251	A7	3526	D4	4568	B3		
3252	B7	3527	C2	4569	A1		
3253	B7	3528	C3	4570	A1		
3254	B7	3533	D2	4571	C4		
3259	D6	3534	D3	4572	D4		
3260	E5	3535	E2	4573	D4		
3261	E6	3536	E3	7251	D5		
3262	E5	3537	D1	7252	D5		
3263	C6	3538	D4	7255	A8		
3264	A4	3539	E2	7259	B7		
3266	A8	3540	E3	7260	C5		
3267	A8	3541	D1	7261	C6		
3268	A8	3542	D4	7331	D1		
3269	A8	3543	D1	7332	D1		
3274	C7	3544	D4	7333	C1		

12 - 5

LAYOUT DIAGRAM - COMBI BOARD
COMPONENT SIDE VIEW

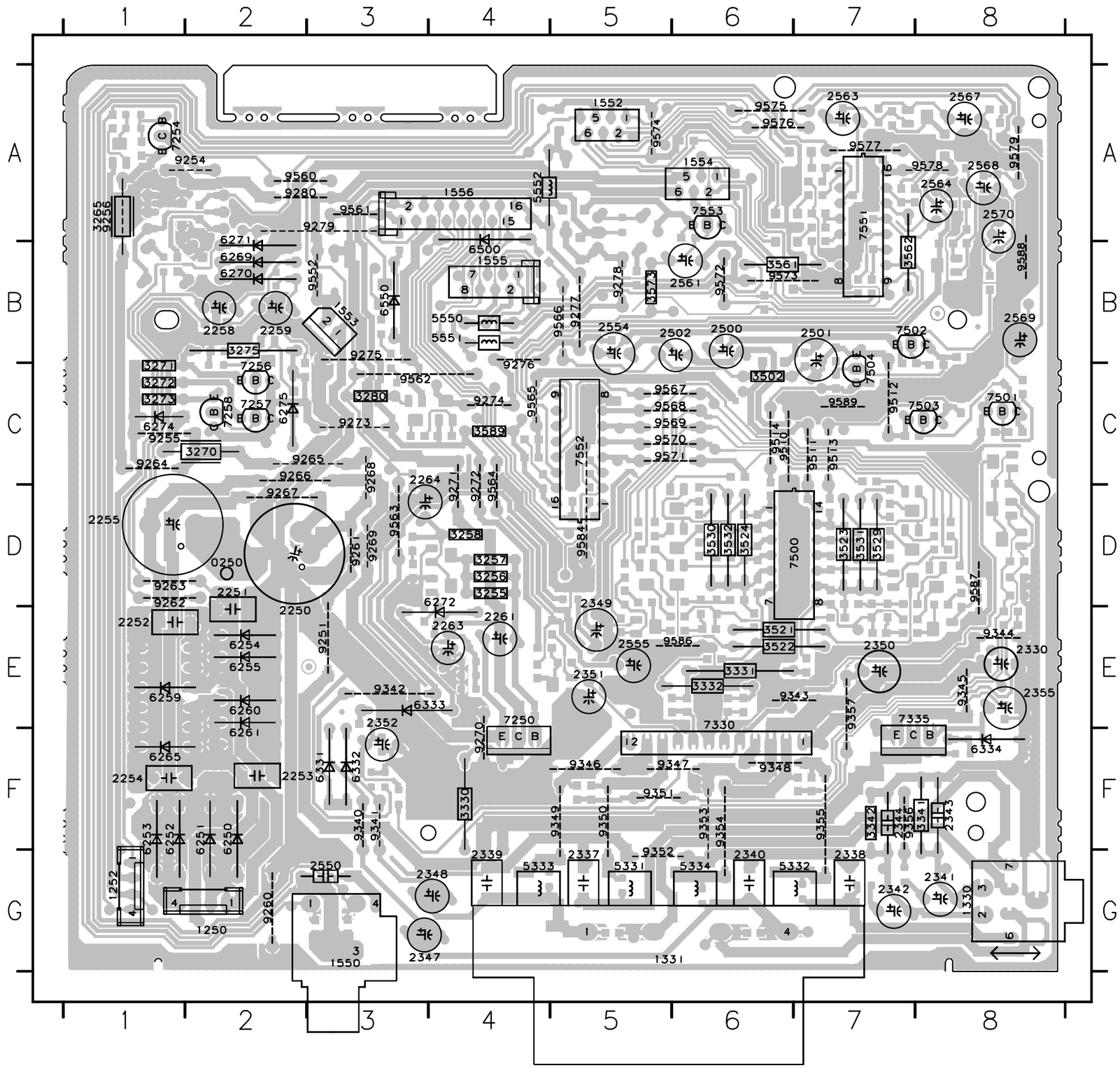

0250	D2	3341	F8	9253	F2	9578	A8
1250	G2	3342	F7	9254	A2	9579	A8
1251	G2	3502	C6	9255	C1	9584	D5
1252	G1	3521	E6	9256	A1	9586	E6
1330	G8	3522	E6	9260	G2	9587	D8
1331	G5	3523	D7	9261	D3	9588	B8
1550	G3	3524	D6	9262	D1	9589	C7
1551	A5	3529	D7	9263	D1		
1552	A5	3530	D6	9264	C1		
1553	B3	3531	D7	9265	C3		
1554	A6	3532	D6	9266	C2		
1555	B4	3561	B6	9267	D2		
1556	A4	3562	B7	9268	C3		
2250	E2	3573	B5	9269	D3		
2251	D2	3589	C4	9270	F4		
2252	E1	5331	G5	9271	D4		
2253	F2	5332	G7	9272	D4		
2254	F1	5333	G4	9273	C3		
2255	D1	5334	G6	9274	C4		
2256	B1	5550	B4	9275	B3		
2257	B2	5551	B4	9276	C4		
2258	B2	5552	A4	9277	B5		
2259	B2	6250	F2	9278	B5		
2261	E4	6251	F2	9279	A3		
2263	E4	6252	F1	9280	A2		
2264	C3	6253	F1	9330	F7		
2265	A5	6254	E2	9340	F3		
2267	E2	6255	E2	9341	F3		
2268	D1	6256	E2	9342	E3		
2330	E8	6257	E1	9343	E7		
2337	G5	6258	E1	9344	E8		
2338	G7	6259	E1	9345	E8		
2339	G4	6260	E2	9346	F5		
2340	G6	6261	F2	9347	F6		
2341	G8	6262	F2	9348	F6		
2342	G7	6263	E1	9349	F5		
2343	F8	6264	F1	9350	F5		
2344	F7	6265	F1	9351	F5		
2347	G3	6266	A2	9352	G5		
2348	G4	6267	A2	9353	F6		
2349	D5	6268	A2	9354	F6		
2350	E7	6269	B2	9355	F7		
2351	E5	6270	B2	9356	F7		
2352	E3	6271	A2	9357	E7		
2355	E8	6272	D4	9510	C6		
2500	B6	6273	A2	9511	C7		
2501	B7	6274	C1	9512	C7		
2502	B6	6275	C2	9513	C7		
2550	G3	6331	F3	9514	C6		
2554	B5	6332	F3	9551	A5		
2555	E5	6333	E4	9552	B3		
2561	B6	6334	F8	9553	B3		
2563	A7	6500	B4	9554	B4		
2564	A8	6550	B3	9555	B4		
2567	A8	7250	E4	9560	A2		
2568	A8	7253	A5	9561	A3		
2569	B8	7254	A1	9562	C3		
2570	A8	7256	C2	9563	D3		
3255	D4	7257	C2	9564	D4		
3256	D4	7258	C2	9565	C4		
3257	D4	7330	E6	9566	B5		
3258	D4	7335	E7	9567	C5		
3265	A1	7500	D7	9568	C5		
3270	C2	7501	C8	9569	C5		
3271	C1	7502	B7	9570	C5		
3272	C1	7503	C8	9571	C5		
3273	C1	7504	C7	9572	B6		
3275	B2	7551	A7	9573	B6		
3280	C3	7552	C5	9574	A5		
3330	F4	7553	A6	9575	A6		
3331	E6	9251	E3	9576	A6		
3332	E6	9252	F4	9577	A7		

12 - 6

COMBI BOARD - CIRCUIT DIAGRAM

Source Selector / Volume Control / digital Sound Control

COMBI BOARD

Source Selection / Sound Control part

SOURCE SELECTOR

ELECTRONIC VOLUME CONTROL

DIGITAL SOUND CONTROL (DSC)

7551 HEF4052BP

7552 HEF4094BP

uP Port Extension

BACKLIGHT

Source Selection Logic Table

Source	A1	A0
TAPE	0	0
AUX	1	0
TUNER	0	1
CD	1	1

LOGIC TABLE

Sound features		Control lines			
DSC	DBB	DBB	POP	BASS	JAZZ
off (flat)	off	0	0	1	0
	on	1	0	1	0
Rock	off	1	0	1	0
	on	1	0	0	0
Jazz	off	0	0	1	1
	on	1	1	1	1
Pop	off	1	1	1	1
	on	1	1	0	1

12 - 7

COMBI BOARD - CIRCUIT DIAGRAM

Supply Part

0250 E8 0250 D4 2254 D8 2258 F3 2262 C11 2266 A10 3251 A6 3255 B10 3259 B11 3263 C10 3267 E12 3271 F10 3275 F11 3279 H13 3283 B12 6251 C3 6255 C6 6259 C7 6263 D7 6267 A5 6271 G5 6275 G12 7253 B13 7257 G11 7261 H13 9254 D13 T251 D2 T255 D8 T259 H3 T263 G13
1250 C2 2251 C5 2255 D8 2259 F4 2263 B13 2267 D4 3252 G3 3256 B10 3260 B11 3264 C13 3268 E12 3272 G10 3276 G12 3280 H14 3284 B12 6252 C3 6256 C6 6260 D6 6264 D7 6268 A6 6272 B11 7250 A10 7254 D12 7258 G10 9251 C4 9255 G9 T252 D2 T256 E4 T260 H3 T264 G14
1251 C2 2252 C8 2256 A4 2260 G5 2264 C10 2268 D8 3253 G4 3257 B10 3261 C11 3265 D11 3269 E12 3273 G10 3277 H12 3281 B12 4250 B14 6253 D3 6257 C7 6261 D6 6265 D7 6269 F4 6273 D13 7251 B10 7255 E12 7259 H10 9252 A14 9256 D11 T253 E2 T257 H3 T261 A14
1252 H2 2253 D5 2257 A5 2261 A10 2265 C13 3250 A4 3254 G5 3258 B11 3262 C12 3266 D12 3270 G8 3274 H10 3278 G13 3282 B12 6250 C3 6254 C5 6258 C7 6262 D6 6266 A5 6270 G4 6274 G9 7252 B11 7256 F11 7260 G13 9253 D3 T250 C2 T254 D4 T258 H3

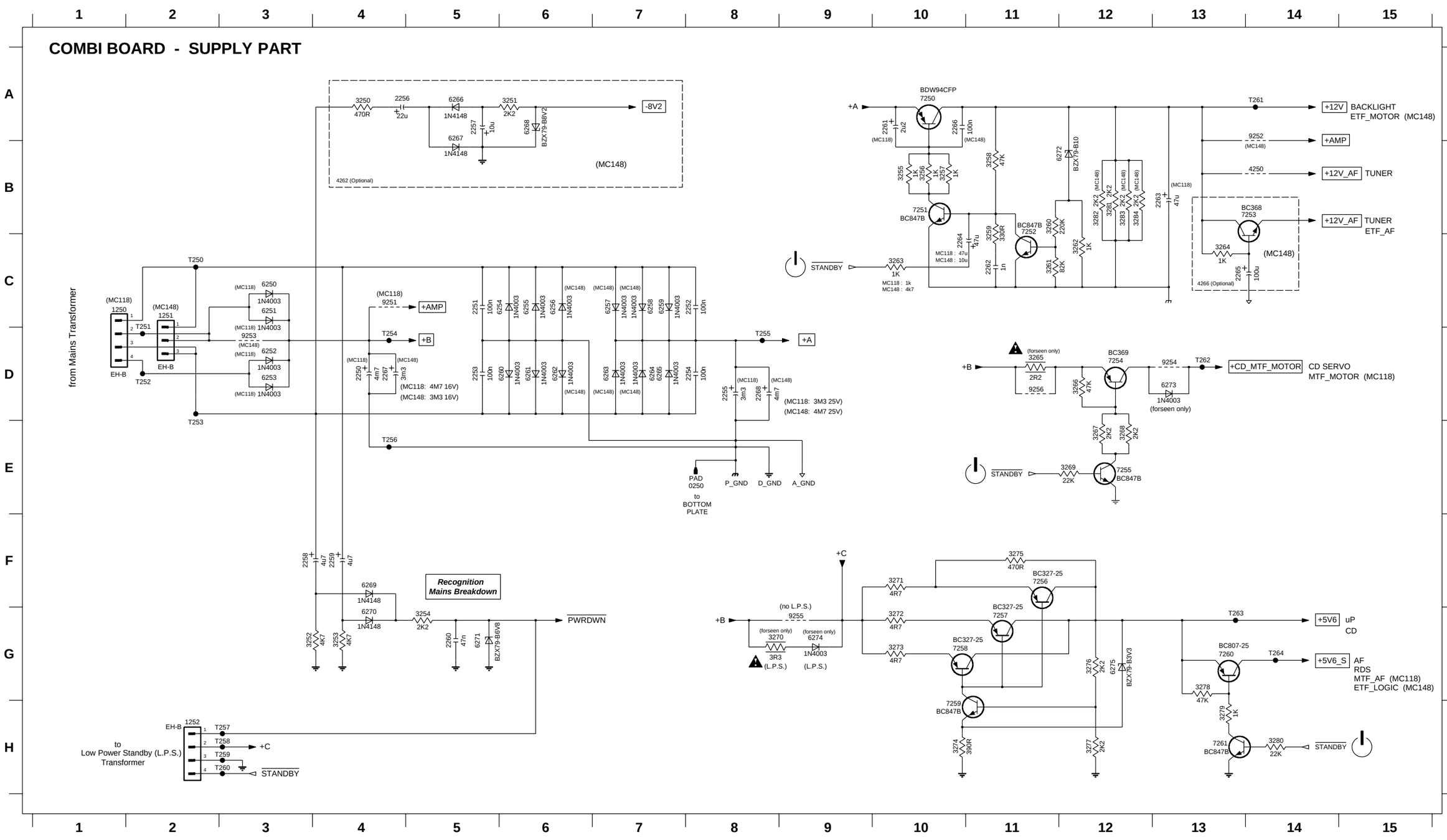

12 - 8

COMBI BOARD - CIRCUIT DIAGRAM

Power Amplifier Part

1330 A12 1331-A D13 2330 B7 2331 E4 2332 D4 2333 E5 2334 D5 2335 E5 2336 D5 2337 E9 2338 D9 2339 F9 2340 C9 2341 A10 2342 B10 2343 A11 2344 B11 2345 D12 2346 E12 2347 F10 2348 F10 2349 G9 2350 F5 2351 B5 2352 H5 2353 G6 2354 G7 2355 B7 3330 F5 3331 E4 3332 D4 3333 E4 3334 D4 3335 E9 3336 D9 3337 E9 3338 C9 3339 A10 3340 B10 3341 A11 3342 B11 3343 E8 3344 D8 3345 E8 3346 C8 3347 F7 3348 F6 3349 G7 3350 H7 3351 G11 3352 G11 3353 G10 3354 B4 3356 B4 3358 B5 3359 H5 3360 H5 3361 B7 3362 B7 3364 B8 3365 B8 4333 E5 4334 D5 4335 A4 5331 E9 5332 D9 5333 E9 5334 C9 6331 G10 6332 G10 6333 H4 6334 B8 7330 C6 7331 G7 7332 G6 7333 H6 7334 B4 7335 B7 9330 A7 T330 B6 T331 H5 T332 C6 T333 C7 T334 G9 T335 G8 T336 G6 T337 A11 T338 B11 T339 D12 T340 E12 T341 D12 T342 D12 T343 E3 T344 D3

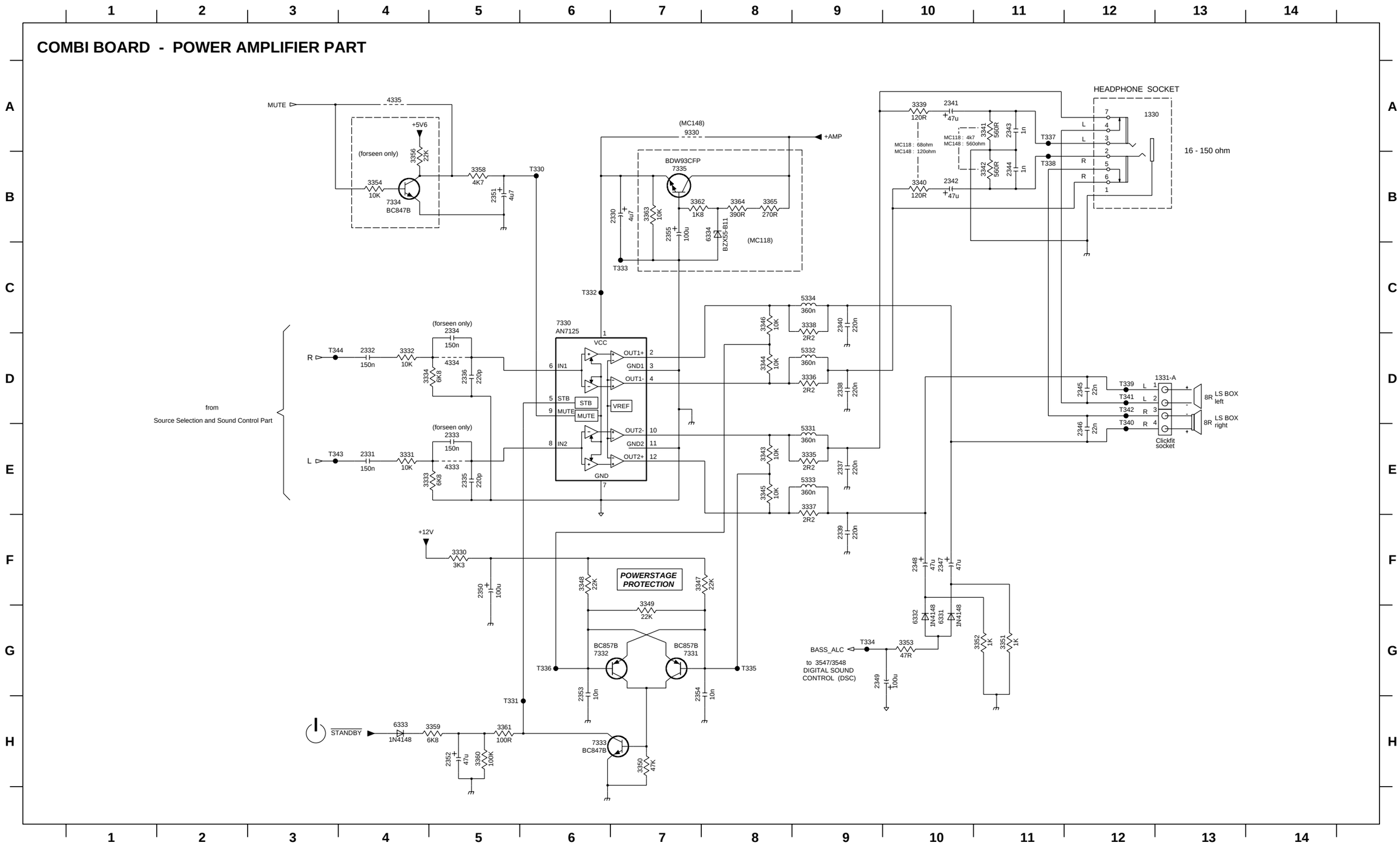

12 - 9

COMBI BOARD - LAYOUT DIAGRAM

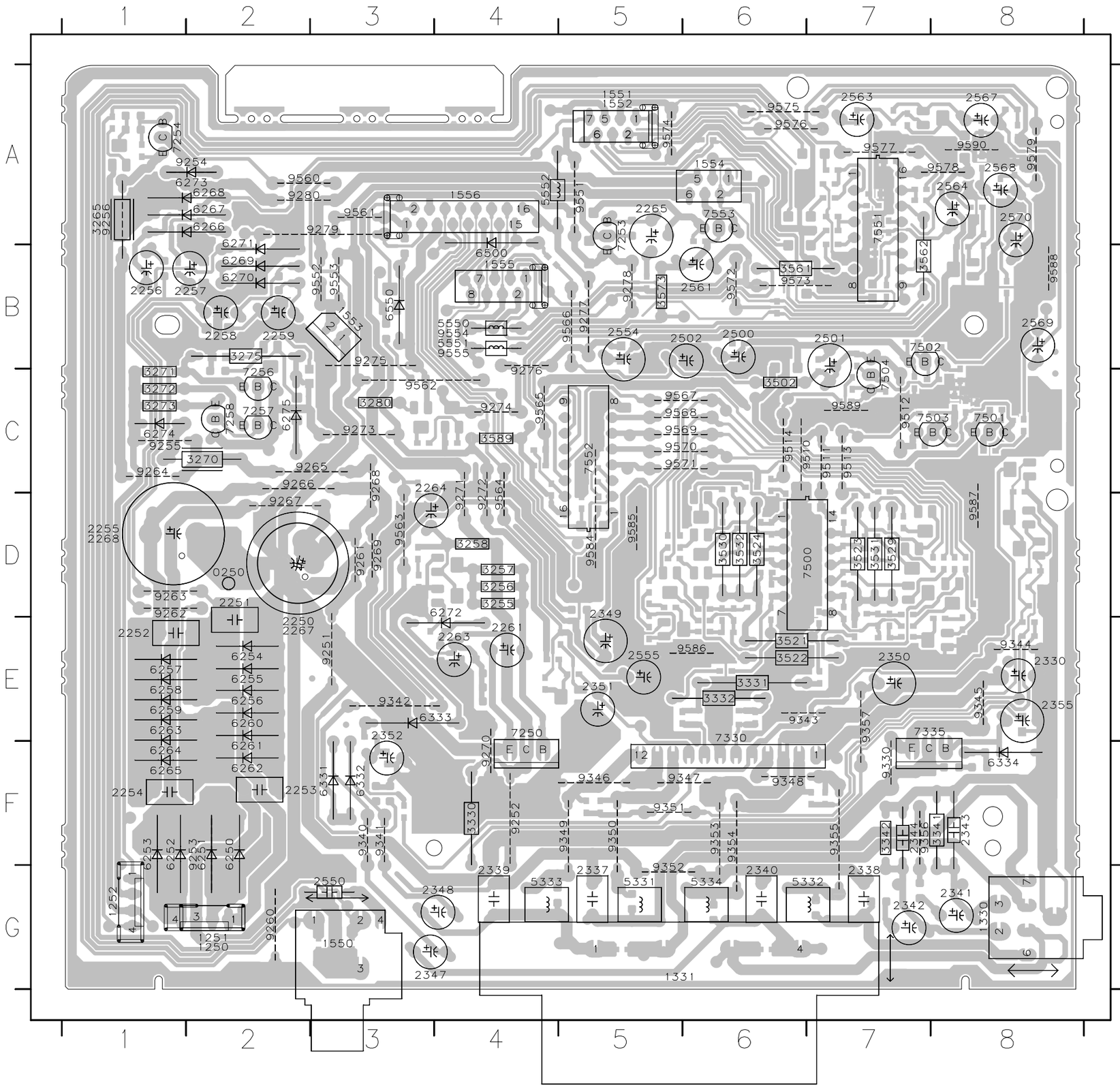

0250	D2	3341	F8	9253	F2	9578	A8
1250	G2	3342	F7	9254	A2	9579	A8
1251	G2	3502	C6	9255	C1	9584	D5
1252	G1	3521	E6	9256	A1	9585	D5
1330	G8	3522	E6	9260	G2	9586	E6
1331	G5	3523	D7	9261	D3	9587	D8
1550	G3	3524	D6	9262	D1	9588	B8
1551	A5	3529	D7	9263	D1	9589	C7
1552	A5	3530	D6	9264	C1	9590	A8
1553	B3	3531	D7	9265	C3		
1554	A6	3532	D6	9266	C2		
1555	B4	3561	B6	9267	D2		
1556	A4	3562	B7	9268	C3		
2250	E2	3573	B5	9269	D3		
2251	D2	3589	C4	9270	F4		
2252	E1	5331	G5	9271	D4		
2253	F2	5332	G7	9272	D4		
2254	F1	5333	G4	9273	C3		
2255	D1	5334	G6	9274	C4		
2256	B1	5550	B4	9275	B3		
2257	B2	5551	B4	9276	C4		
2258	B2	5552	A4	9277	B5		
2259	B2	6250	F2	9278	B5		
2261	E4	6251	F2	9279	A3		
2263	E4	6252	F1	9280	A2		
2264	C3	6253	F1	9330	F7		
2265	A5	6254	E2	9340	F3		
2267	E2	6255	E2	9341	F3		
2268	D1	6256	E2	9342	E3		
2330	E8	6257	E1	9343	E6		
2337	G5	6258	E1	9344	E8		
2338	G7	6259	E1	9345	E8		
2339	G4	6260	E2	9346	F5		
2340	G6	6261	F2	9347	F6		
2341	G8	6262	F2	9348	F6		
2342	G7	6263	E1	9349	F5		
2343	F8	6264	F1	9350	F5		
2344	F7	6265	F1	9351	F5		
2347	G3	6266	A2	9352	G5		
2348	G4	6267	A2	9353	F6		
2349	D5	6268	A2	9354	F6		
2350	E7	6269	B2	9355	F7		
2351	E5	6270	B2	9356	F7		
2352	E3	6271	A2	9357	E7		
2355	E8	6272	D4	9510	C6		
2500	B6	6273	A2	9511	C7		
2501	B7	6274	C1	9512	C7		
2502	B6	6275	C2	9513	C7		
2550	G3	6331	F3	9514	C6		
2554	B5	6332	F3	9551	A5		
2555	E5	6333	E4	9552	B3		
2561	B6	6334	F8	9553	B3		
2563	A7	6500	B3	9554	B4		
2564	A8	6550	B3	9555	B4		
2567	A8	7250	E4	9560	A2		
2568	A8	7253	A5	9561	A3		
2569	B8	7254	A1	9562	C3		
2570	A8	7256	C2	9563	D3		
3255	D4	7257	C2	9564	D4		
3256	D4	7258	C2	9565	C4		
3257	D4	7330	E6	9566	B5		
3258	D4	7335	E7	9567	C5		
3265	A1	7500	D7	9568	C5		
3270	C2	7501	C8	9569	C5		
3271	C1	7502	B7	9570	C5		
3272	C1	7503	C8	9571	C5		
3273	C1	7504	C7	9572	B6		
3275	B2	7551	A7	9573	B6		
3280	C3	7552	C5	9574	A5		
3330	F4	7553	A6	9575	A6		
3331	E6	9251	E3	9576	A6		
3332	E6	9252	F4	9577	A7		

12 - 10

COMBI BOARD - LAYOUT DIAGRAM

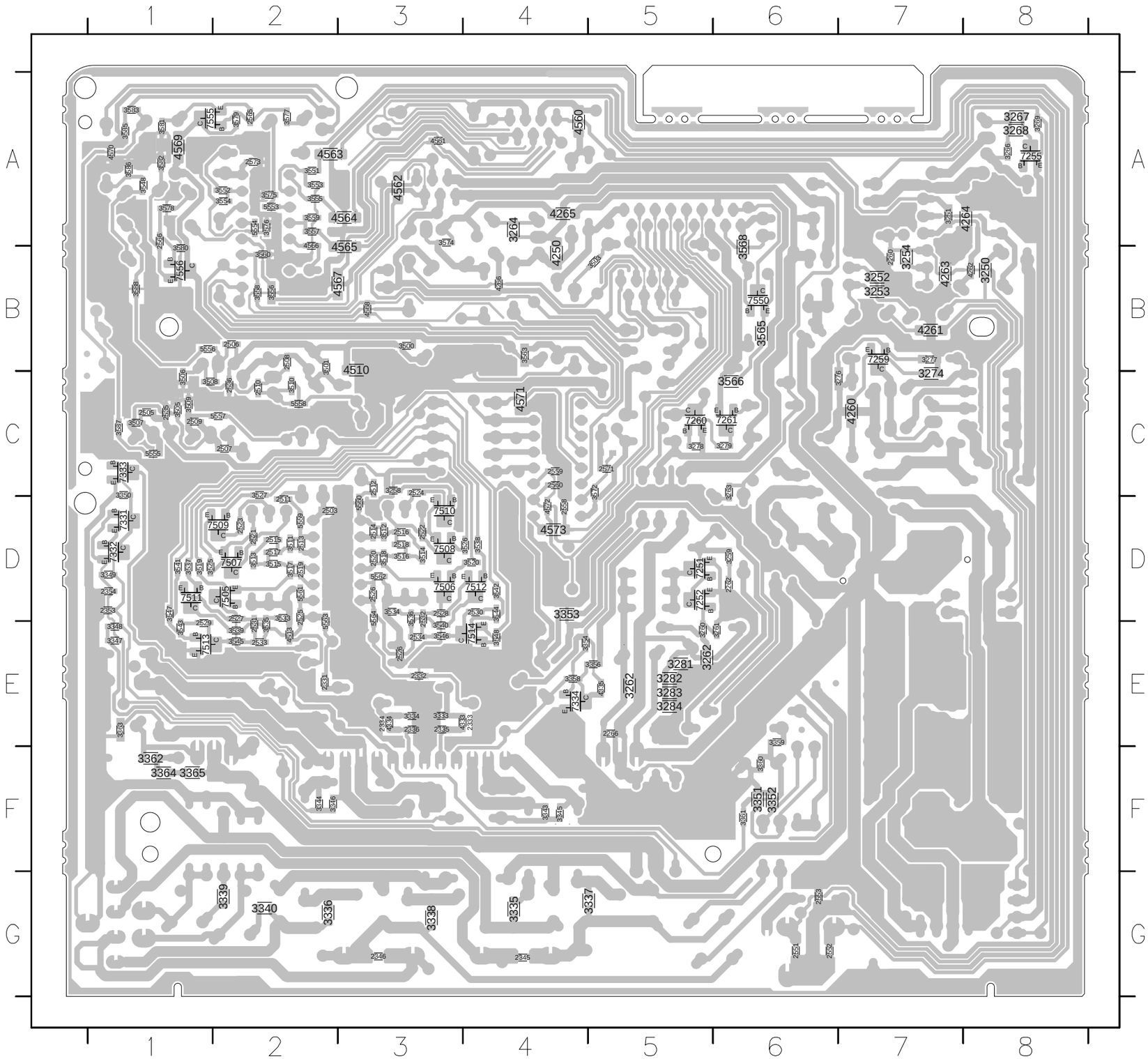

2260	B7	3274	C7	3544	D4	5563	E2
2262	D6	3276	C7	3545	E2	5564	D3
2266	E5	3277	B7	3546	E3	7251	D5
2331	E2	3278	C5	3547	D1	7252	D5
2332	E3	3279	C6	3548	E4	7255	A8
2333	E4	3281	E5	3551	A2	7259	B7
2334	E3	3282	E5	3552	A2	7260	C5
2335	E3	3283	E5	3553	A2	7261	C6
2336	E3	3284	E5	3554	A2	7331	D1
2345	G4	3333	E3	3555	A2	7332	D1
2346	G3	3334	E3	3556	B2	7333	C1
2353	D1	3335	G4	3557	A2	7334	E4
2354	D1	3336	G2	3558	B2	7505	D2
2503	D2	3337	G5	3559	A2	7506	D3
2505	C1	3338	G3	3560	B2	7507	D2
2506	B2	3339	G2	3563	B4	7508	D3
2507	C2	3340	G2	3565	B6	7509	D2
2508	B2	3343	F4	3566	C6	7510	D3
2509	C1	3344	F2	3568	B6	7511	D1
2510	C2	3345	F4	3572	C5	7512	D4
2511	D2	3346	F2	3574	A3	7513	E1
2512	C3	3347	E1	3575	A2	7514	E4
2513	D2	3348	E1	3576	A2	7550	B6
2514	D3	3349	D1	3577	A2	7555	A1
2515	D2	3350	C1	3578	A1	7556	B1
2516	D3	3351	F6	3579	A2		
2517	D2	3352	F6	3580	B1		
2518	D3	3353	D4	3581	A1		
2519	D2	3354	E4	3582	A1		
2520	D3	3356	E5	3583	A1		
2521	D2	3358	E4	3584	A1		
2522	D3	3359	E6	3585	A1		
2523	D2	3360	F6	3586	A1		
2524	C3	3361	F6	3587	C1		
2525	D2	3362	F1	3588	B1		
2526	D3	3363	E1	4250	B4		
2527	D2	3364	F1	4260	C7		
2528	D3	3365	F1	4261	B7		
2529	E1	3500	B3	4262	B8		
2530	D4	3501	B2	4263	B7		
2531	E2	3503	B5	4264	A8		
2532	D3	3505	C1	4265	A4		
2533	E2	3506	C1	4266	B4		
2534	E3	3507	C1	4333	E4		
2535	C1	3508	C1	4334	E3		
2536	C2	3509	C1	4335	E5		
2551	G6	3510	C2	4510	B3		
2552	G6	3511	D2	4513	E2		
2553	G6	3512	D3	4560	A4		
2557	C5	3513	D2	4561	A3		
2558	D4	3514	D3	4562	A3		
2559	C4	3515	D2	4563	A2		
2560	C4	3516	D3	4564	A3		
2565	A2	3517	D2	4565	B3		
2566	A1	3518	D3	4566	A2		
2571	C5	3519	D1	4567	B3		
2573	A2	3520	D4	4568	B3		
3250	B8	3525	D1	4569	A1		
3251	A7	3526	D4	4570	A1		
3252	B7	3527	C2	4571	C4		
3253	B7	3528	C3	4572	D4		
3254	B7	3533	D2	4573	D4		
3259	D6	3534	D3	5553	A2		
3260	E5	3535	E2	5554	A2		
3261	E6	3536	D3	5555	C1		
3262	E5	3537	D1	5556	B1		
3263	C6	3538	D4	5557	C2		
3264	A4	3539	E2	5558	C2		
3266	A8	3540	E3	5559	D2		
3267	A8	3541	D1	5560	D3		
3268	A8	3542	D4	5561	D2		
3269	A8	3543	E1	5562	D3		

13 - 1

EXPLODED VIEW DIAGRAM

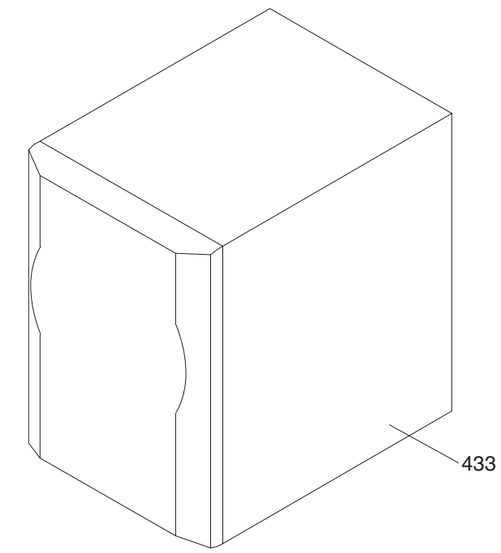

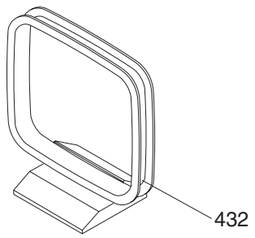

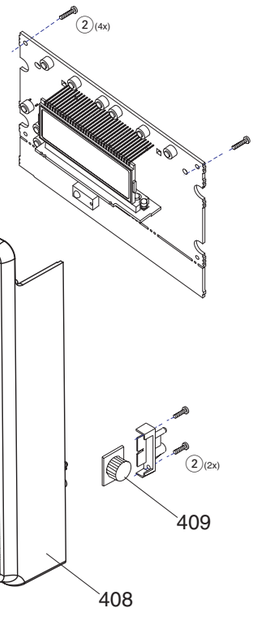

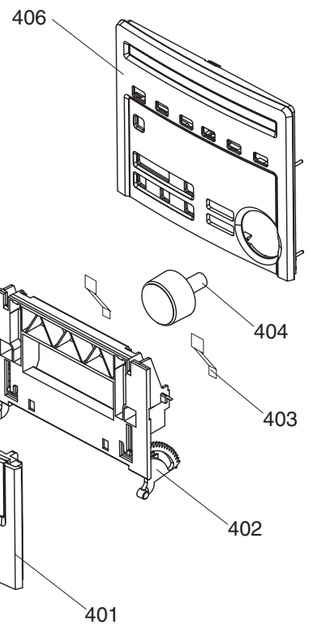

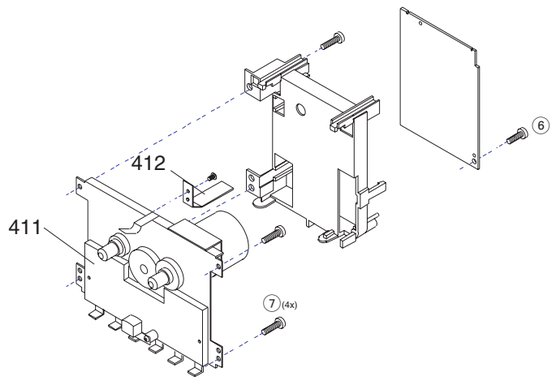

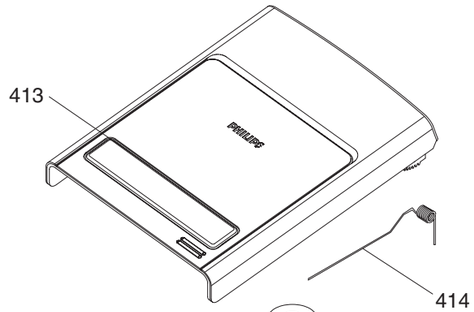

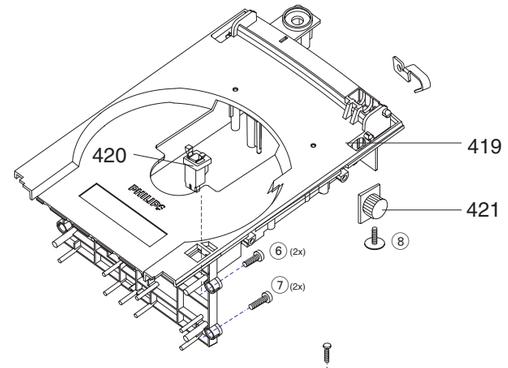

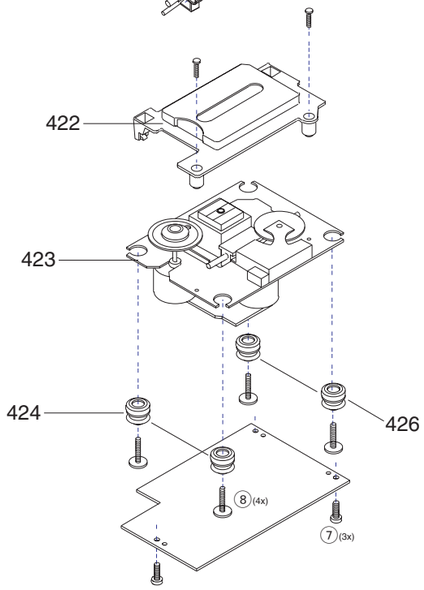

SCREW LIST

①. T2 x 6
②. T2 x 10
③. T2.5 x 10
④. T3 x 6
⑤. T3 x 8
⑥. T3 x10
⑦. T3 x12
⑧. P/W C2.5 x 10
⑨. P/W T3 x 6
⑩. P/W T3 x10

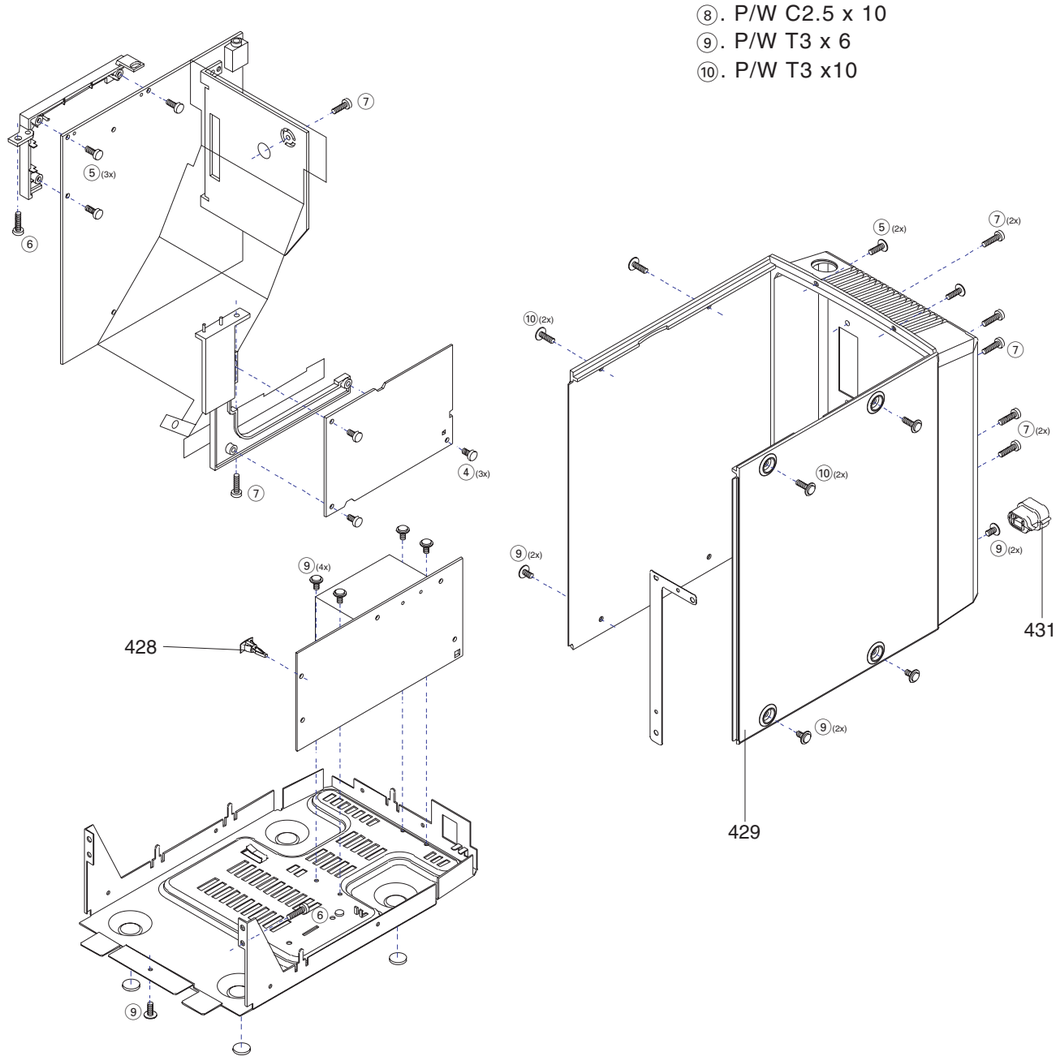

13 - 2

MECHANICAL PARTSLIST - MAIN SET

401	3140 117 73691	CASSETTE DOOR ASSY
402	3140 114 64221	Technique door (MTF)
403	3139 111 22786	SPRING LEAF
404	3140 117 72941	KNOB-VOLUME PNT
406	3140 117 73181	PANEL FRONT ASSY (-/22/25)
406	3140 117 73551	PANEL FRONT ASSY (-/30/33/21/21M/37)
406	3141 077 50392	PANEL FRONT ASSY (MC270/22)
408	3140 117 73171	FRONT CABINET ASSY (not for-/37)
408	3140 117 73541	FRONT CABINET ASSY (-/37)
409	3139 118 73624	DAMPER ASSY MODULE 0.8
411	3139 118 78741	DECK TAPE MECHANISM
412	3140 111 20804	SPRING-RECORDING
413	3140 117 73201	CD DOOR ASSY
413	3140 117 73481	CD DOOR ASSY MC260/37
414	3140 111 01512	SPRING-CD
416	3103 307 95011	PRESSURE RING ASSY
417	3140 114 24401	RING (CD LID)
418	3139 118 10001	DISC
419	3140 114 64471	CD-TRAY
421	3139 118 73624	DAMPER ASSY
422	3103 304 66151	COVER-CD COMPATIBLE
424	3140 114 13902	DAMPER - RUBBER (35 DEGREES)
426	3140 114 13892	DAMPER - RUBBER (30 DEG)
428	3139 114 35693	SPACER 5MM
429	3141 077 50081	CABINET REAR PNT
429	3141 077 50181	CABINET REAR PNT (only for-/37)
431	3140 113 21881	MAINS CORD RELIEF
431	3140 113 22101	MAINS CORD RELIEF(only for-/37)
432	2422 549 45067	ANT AM LOOP
432	3104 218 20371	AM FRAME AERIAL
433	3141 078 50001	PACKED SPEAKER BOX ASSY (MC260)
433	3140 118 51702	PACKED SPEAKER BOX ASSY (MC270)
	3139 228 61971	REMOTE CONTROL
	3140 118 51061	IRT ASSY
	3139 118 71161	FM AERIAL
	3103 308 91963	CABLE 55MM AWG24/JST

Note: Only these parts mentioned in the list are normal service parts.

13 - 3

EXPLODED VIEW DIAGRAM - ETF8 TAPE DECK

1	9965 000 10041	Rec/Pb Head Assembly
7	9965 000 10042	Pinch Roller Bracket R
8	9965 000 10043	Pinch Roller Bracket L
9	9965 000 10044	Pinch Roller
32	9965 000 10045	ASSEMBLY BOBBIN
34	9965 000 10046	Motor Assembly
36	9965 000 07441	Belt-SR
37	9965 000 07442	Belt-FR
39	9965 000 10047	Housing
40-2	9965 000 10048	Housing
40-3	9965 000 10049	Mode Switch
40-4	4822 116 83883	470R 5% 0,5W
40-5	9965 000 10050	Spacer
40-6	9965 000 10051	Photo Interrupter SG211V
40-7	9965 000 07443	Box Switch
40-8	9965 000 10052	Spring-Switch
61	9965 000 10053	Spring
62	9965 000 10054	Spring

Note: Only these parts mentioned in the list are normal service parts.

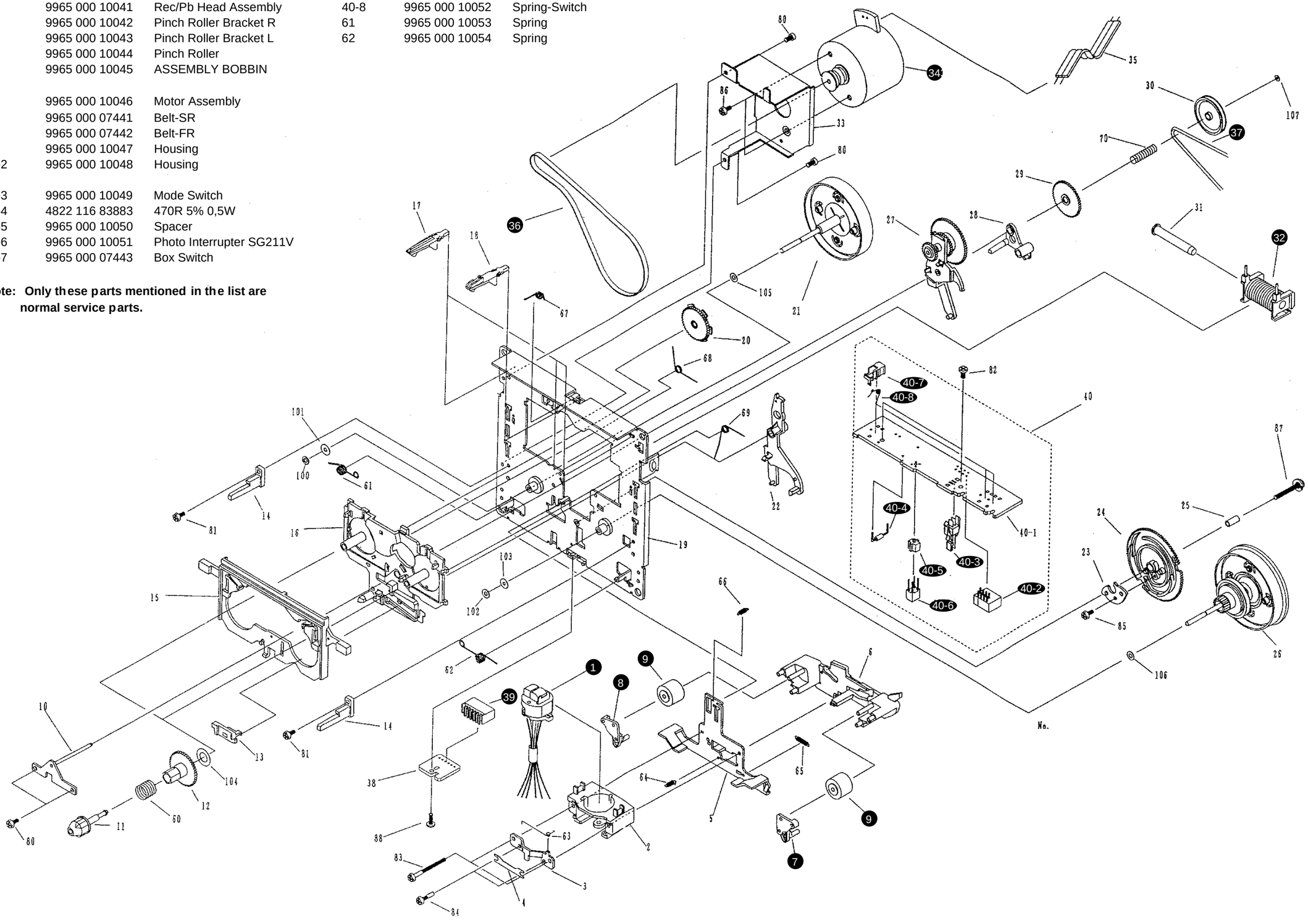

ELETRICAL SERVICE PARTSLIST

1000	3103 309 05291	CD DA11N DRIVE ASSY
1021	3140 118 63271	MI-PL PBAS 6 MC148/VDE (-/22/25/30/33)
1021	3140 118 63311	MI-PL PBAS 6 MC148/OVE (-/21M/21/37)
1022	3103 308 64241	PBAS TUNER ECO6 AS /02 3B RDS (-/22/25)
1022	3103 308 64281	PBAS TUNER ECO6 AS /17 2B (-/21M/21/37)
1022	3103 308 64401	PBAS TUNER ECO6 AS /01 2B (-/30/33)
1025	8240 008 70121	SWITCH-LATCH 1P
1330	2422 026 05282	SOCKET PHONE H 1P
1331	2422 026 04001	SOCKET CLICK H 4P
1400	2422 128 02922	SWITCH-TACT
1401	2422 128 02922	SWITCH-TACT
1402	2422 128 02922	SWITCH-TACT
1403	2422 128 02922	SWITCH-TACT
1404	2422 128 02922	SWITCH-TACT
1405	2422 128 02922	SWITCH-TACT
1406	2422 128 02922	SWITCH-TACT
1407	2422 128 02922	SWITCH-TACT
1408	2422 128 02922	SWITCH-TACT
1409	2422 128 02922	SWITCH-TACT
1410	2422 128 02922	SWITCH-TACT
1411	2422 128 02922	SWITCH-TACT
1412	2422 128 02922	SWITCH-TACT
1413	2422 128 02922	SWITCH-TACT
1414	2422 128 02922	SWITCH-TACT
1415	2422 129 16545	ROT ENCODER 24P
1425	3140 110 51941	LCD PANEL
1550	2422 026 04397	SOCKET CINCH H 2P
1601	2422 086 10423	FUSE 3,15A 250V
1601	2422 086 10785	FUSE 3,15A 250V
1602	2422 086 10423	FUSE 3,15A 250V
1602	2422 086 10785	FUSE 3,15A 250V
1603	2422 086 10423	FUSE 3,15A 250V
1603	2422 086 10785	FUSE 3,15A 250V
5601	3140 118 32432	TRANSFORMER (-/22/25/30/33)
5601	3140 118 32442	TRANSFORMER (-/21/21M)
5601	3140 118 32452	TRANSFORMER (-/37)
6901	9322 074 50682	LED VS LTL-16KAE
6902	9322 074 50682	LED VS LTL-16KAE
6903	9322 074 50682	LED VS LTL-16KAE
6904	9322 074 50682	LED VS LTL-16KAE
6905	9322 074 50682	LED VS LTL-16KAE
6906	9322 074 50682	LED VS LTL-16KAE
6907	9322 074 50682	LED VS LTL-16KAE
6908	9322 074 50682	LED VS LTL-16KAE
6909	9322 074 50682	LED VS LTL-16KAE
6910	9322 074 50682	LED VS LTL-16KAE
6911	9322 074 50682	LED VS LTL-16KAE
6912	9322 074 50682	LED VS LTL-16KAE
7330	9322 133 18682	AN7125P
7400	3140 110 51781	MCU TMP87CP23F

Note: Only these parts mentioned in the list are normal service parts.

ELECTRICAL PARTSLIST - FRONT, LED AND COMBI BOARD

- MISCELLANEOUS -

1330	2422 026 05099	CONNECTOR PHONE H 1P
1331	4822 267 31176	CONNECTOR
1400	4822 276 13775	SWITCH-PUSH
1401	4822 276 13775	SWITCH-PUSH
1402	4822 276 13775	SWITCH-PUSH
1403	4822 276 13775	SWITCH-PUSH
1404	4822 276 13775	SWITCH-PUSH
1405	4822 276 13775	SWITCH-PUSH
1406	4822 276 13775	SWITCH-PUSH
1407	4822 276 13775	SWITCH-PUSH
1408	4822 276 13775	SWITCH-PUSH
1409	4822 276 13775	SWITCH-PUSH
1410	4822 276 13775	SWITCH-PUSH
1411	4822 276 13775	SWITCH-PUSH
1412	4822 276 13775	SWITCH-PUSH
1413	4822 276 13775	SWITCH-PUSH
1414	4822 276 13775	SWITCH-PUSH
1415	2422 129 16545	ROTARY ENCODER 24P
1416	2422 025 14546	SOCKET FFC 16P
1418	4822 265 11207	CONNECTOR SOCKET 6P
1420	4822 267 10956	CONNECTOR 7P
1425	3140 110 51000	LCD PANEL
1550	4822 265 20553	CONNECTOR
1551	4822 267 10953	CONNECTOR 7P
1554	4822 267 10731	CONNECTOR
1555	4822 265 11515	CONNECTOR BM V 8P
1556	2422 025 14526	SOCKET FFC 16P

- CAPACITORS -

2251	5322 121 42386	100nF 5% 63V
2252	5322 121 42386	100nF 5% 63V
2253	5322 121 42386	100nF 5% 63V
2254	5322 121 42386	100nF 5% 63V
2256	4822 124 81151	22 F 50V
2257	4822 124 40248	10 F 20% 63V
2258	4822 124 40769	4,7 F 20% 100V
2259	4822 124 40769	4,7 F 20% 100V
2260	3198 017 34730	47nF X7R 16V
2262	3198 016 31020	1nF NP0 25V
2264	4822 124 40248	10 F 20% 63V
2265	4822 124 40207	100 F 20% 25V
2266	2238 586 59812	100nF +80-20% Y5V 50V
2267	4822 124 40784	3300 F 20%16V
2268	4822 124 12012	4700 F 20% 25V
2330	4822 124 40769	4,7 F 20% 100V
2331	2238 786 19852	150nF +80-20% Y5V 16V
2332	2238 786 19852	150nF +80-20% Y5V 16V
2337	4822 121 42408	220nF 5% 63V
2338	4822 121 42408	220nF 5% 63V

- CAPACITORS -

2339	4822 121 42408	220nF 5% 63V
2340	4822 121 42408	220nF 5% 63V
2341	4822 124 40433	47 F 20% 25V
2342	4822 124 40433	47 F 20% 25V
2343	4822 122 33197	1nF 10% 50V
2344	4822 122 33197	1nF 10% 50V
2345	4822 126 14494	22nF 10% X7R 25V
2346	4822 126 14494	22nF 10% X7R 25V
2347	4822 124 40433	47 F 20% 25V
2348	4822 124 40433	47 F 20% 25V
2349	4822 124 40207	100 F 20% 25V
2350	4822 124 40207	100 F 20% 25V
2351	4822 124 40769	4,7 F 20% 100V
2352	4822 124 40433	47 F 20% 25V
2353	5322 126 11583	10nF 10% X7R 50V
2354	5322 126 11583	10nF 10% X7R 50V
2400	5322 126 11583	10nF 10% X7R 50V
2401	5322 126 11583	10nF 10% X7R 50V
2402	4822 124 23432	100 F 20% 10V
2403	2238 586 59812	100nF +80-20% Y5V 50V
2404	4822 124 23432	100 F 20% 10V
2405	5322 126 11583	10nF 10% X7R 50V
2406	5322 126 11583	10nF 10% X7R 50V
2407	2238 586 59812	100nF +80-20% Y5V 50V
2408	2238 586 59812	100nF +80-20% Y5V 50V
2409	5322 126 11583	10nF 10% X7R 50V
2410	5322 126 11583	10nF 10% X7R 50V
2411	4822 122 33752	15pF 5% NP0 50V
2412	4822 122 33752	15pF 5% NP0 50V
2413	4822 126 11785	47pF 5% NP0 50V
2414	5322 126 11583	10nF 10% X7R 50V
2415	4822 126 11669	27pF
2416	4822 126 11669	27pF
2417	4822 124 40433	47 F 20% 25V
2418	5322 126 11578	1nF 10% X7R 50V
2419	2238 586 59812	100nF +80-20% Y5V 50V
2420	5322 126 11583	10nF 10% X7R 50V
2421	5322 126 11583	10nF 10% X7R 50V
2422	2020 552 94427	100pF 5% NP0 50V
2423	2020 552 94427	100pF 5% NP0 50V
2431	4822 126 13193	4,7nF 10% X7R 63V
2432	2020 552 94427	100pF 5% NP0 50V
2433	4822 126 13881	470pF 5% 50V
2434	2020 552 94427	100pF 5% NP0 50V
2435	4822 126 13881	470pF 5% 50V
2436	4822 126 13881	470pF 5% 50V
2437	4822 126 13881	470pF 5% 50V
2438	4822 126 13881	470pF 5% 50V
2439	4822 126 13881	470pF 5% 50V
2440	4822 126 14238	2,2nF X7R 50V

ELECTRICAL PARTSLIST - FRONT,LED AND COMBI BOARD

- CAPACITORS -

2441	5322 126 11583	10nF 10% X7R 50V
2442	4822 126 13883	220pF 5% 50V
2443	4822 126 13883	220pF 5% 50V
2444	4822 126 13883	220pF 5% 50V
2445	4822 126 13883	220pF 5% 50V
2446	5322 126 11583	10nF 10% X7R 50V
2447	4822 126 13881	470pF 5% 50V
2448	4822 126 13881	470pF 5% 50V
2449	4822 126 13881	470pF 5% 50V
2450	4822 126 13881	470pF 5% 50V
2451	4822 126 13881	470pF 5% 50V
2500	4822 124 41584	100µF 20% 10V
2501	4822 124 40196	220µF 20% 16V
2502	4822 124 40248	10µF 20% 63V
2503	4822 126 14494	22nF 10% X7R 25V
2505	2020 552 94427	100pF 5% NP0 50V
2506	2020 552 94427	100pF 5% NP0 50V
2507	2020 552 94427	100pF 5% NP0 50V
2508	2020 552 94427	100pF 5% NP0 50V
2509	4822 122 33761	22pF 5% NP0 50V
2510	4822 122 33761	22pF 5% NP0 50V
2511	4822 126 13879	220nF +80-20% 16V
2512	4822 126 13879	220nF +80-20% 16V
2513	4822 126 11785	47pF 5% NP0 50V
2514	4822 126 11785	47pF 5% NP0 50V
2515	5322 126 11583	10nF 10% X7R 50V
2516	5322 126 11583	10nF 10% X7R 50V
2517	4822 126 14247	1,5nF X7R 50V
2518	4822 126 14247	1,5nF X7R 50V
2519	4822 126 13883	220pF 5% 50V
2520	4822 126 13883	220pF 5% 50V
2521	4822 126 14247	1,5nF X7R 50V
2522	4822 126 14247	1,5nF X7R 50V
2523	3198 016 36810	680pF NP0 25V
2524	3198 016 36810	680pF NP0 25V
2525	4822 126 11785	47pF 5% NP0 50V
2526	4822 126 11785	47pF 5% NP0 50V
2527	5322 126 11583	10nF 10% X7R 50V
2528	5322 126 11583	10nF 10% X7R 50V
2529	2238 586 59812	100nF +80-20% Y5V 50V
2530	2238 586 59812	100nF +80-20% Y5V 50V
2531	2238 586 59812	100nF +80-20% Y5V 50V
2532	2238 586 59812	100nF +80-20% Y5V 50V
2533	2238 586 59812	100nF +80-20% Y5V 50V
2534	2238 586 59812	100nF +80-20% Y5V 50V
2535	2238 586 59812	100nF +80-20% Y5V 50V
2550	4822 126 11585	22nF +80-20% Y5V 25V
2551	4822 126 14238	2,2nF X7R 50V
2552	4822 126 14238	2,2nF X7R 50V
2553	4822 126 14494	22nF 10% X7R 25V

- CAPACITORS -

2554	4822 124 40196	220µF 20% 16V
2555	4822 124 22652	2,2µF 20% 50V
2557	3198 017 44740	470nF Y5V 10V
2558	4822 126 13883	220pF 5% 50V
2559	4822 126 13883	220pF 5% 50V
2560	4822 126 13883	220pF 5% 50V
2561	4822 124 81151	22µF 50V
2563	4822 124 41407	0,47µF 20% 63V
2564	4822 124 41407	0,47µF 20% 63V
2565	2020 552 94427	100pF 5% NP0 50V
2566	2020 552 94427	100pF 5% NP0 50V
2567	4822 124 22652	2,2µF 20% 50V
2568	4822 124 22652	2,2µF 20% 50V
2569	4822 124 21913	1µF 20% 63V
2570	4822 124 21913	1µF 20% 63V
2571	3198 017 44740	470nF Y5V 10V
2573	2238 586 59812	100nF +80-20% Y5V 50V

- RESISTORS -

3250	4822 051 20471	470R 5% 0,1W
3251	4822 051 30222	2,2K 5% 0,062W
3252	4822 051 20472	4,7K 5% 0,1W
3253	4822 051 20472	4,7K 5% 0,1W
3254	4822 117 11449	2,2K 5% 0,1W
3255	4822 050 11002	1K 1% 0,4W
3256	4822 050 11002	1K 1% 0,4W
3257	4822 050 11002	1K 1% 0,4W
3258	4822 116 83884	47K 5% 0,5W
3259	4822 051 30331	330R 5% 0,062W
3260	4822 117 12891	220K 1%
3261	4822 117 12864	82K 5% 0,6W
3262	4822 051 10102	1K 2% 0,25W
3263	4822 051 20472	4,7K 5% 0,1W
3264	4822 051 10102	1K 2% 0,25W
3266	4822 117 12925	47K 1% 0,063W
3267	4822 117 11449	2,2K 5% 0,1W
3268	4822 117 11449	2,2K 5% 0,1W
3269	4822 051 30223	22K 5% 0,062W
3271	4822 050 24708	4,7R 1% 0,6W
3272	4822 050 24708	4,7R 1% 0,6W
3273	4822 050 24708	4,7R 1% 0,6W
3274	4822 051 20391	390R 5% 0,1W
3275	4822 116 83883	470R 5% 0,5W
3276	4822 051 30222	2,2K 5% 0,062W
3277	4822 051 30222	2,2K 5% 0,062W
3278	4822 117 12925	47K 1% 0,063W
3279	4822 051 30102	1K 5% 0,062W
3280	4822 116 52257	22K 5% 0,5W
3281	4822 117 11449	2,2K 5% 0,1W

ELECTRICAL PARTSLIST - FRONT, LED AND COMBI BOARD

- RESISTORS -

3282	4822 117 11449	2,2K 5% 0,1W
3283	4822 117 11449	2,2K 5% 0,1W
3284	4822 117 11449	2,2K 5% 0,1W
3330	4822 116 52269	3,3K 5% 0,5W
3331	4822 050 21003	10K 1% 0,6W
3332	4822 050 21003	10K 1% 0,6W
3333	4822 051 30682	6,8K 5% 0,062W
3334	4822 051 30682	6,8K 5% 0,062W
3335	4822 051 20228	2,2R 5% 0,1W
3336	4822 051 20228	2,2R 5% 0,1W
3337	4822 051 20228	2,2R 5% 0,1W
3338	4822 051 20228	2,2R 5% 0,1W
3339	4822 051 20121	120R 5% 0,1W
3340	4822 051 20121	120R 5% 0,1W
3341	4822 116 52226	560R 5% 0,5W
3342	4822 116 52226	560R 5% 0,5W
3343	4822 051 30103	10K 5% 0,062W
3344	4822 051 30103	10K 5% 0,062W
3345	4822 051 30103	10K 5% 0,062W
3346	4822 051 30103	10K 5% 0,062W
3347	4822 051 30223	22K 5% 0,062W
3348	4822 051 30223	22K 5% 0,062W
3349	4822 051 30223	22K 5% 0,062W
3350	4822 117 12925	47K 1% 0,063W
3351	4822 051 10102	1K 2% 0,25W
3352	4822 051 10102	1K 2% 0,25W
3353	4822 051 20479	47R 5% 0,1W
3358	4822 051 30472	4,7K 5% 0,062W
3359	4822 051 30682	6,8K 5% 0,062W
3360	4822 117 13632	100K 1% 0,62W
3361	4822 117 11373	100R 1%
3400	4822 051 30109	10R 5% 0,062W
3401	4822 116 52182	15R 5% 0,5W
3402	4822 116 52175	100R 5% 0,5W
3403	4822 051 30682	6,8K 5% 0,062W
3404	4822 051 30332	3,3K 5% 0,062W
3405	4822 051 30102	1K 5% 0,062W
3406	4822 117 13632	100K 1% 0,62W
3407	4822 051 30102	1K 5% 0,062W
3408	4822 051 30474	470K 5% 0,062W
3409	4822 051 30103	10K 5% 0,062W
3410	4822 051 30101	100R 5% 0,062W
3411	4822 117 13632	100K 1% 0,62W
3412	4822 051 30103	10K 5% 0,062W
3413	4822 051 30102	1K 5% 0,062W
3414	4822 051 30333	33K 5% 0,062W
3415	4822 051 30153	15K 5% 0,062W
3416	4822 116 83872	220R 5% 0,5W
3417	4822 051 30153	15K 5% 0,062W
3418	4822 051 30152	1,5K 5% 0,062W

- RESISTORS -

3419	4822 051 30152	1,5K 5% 0,062W
3420	4822 050 21003	10K 1% 0,6W
3421	4822 051 30562	5,6K 5% 0,063W
3422	4822 051 30471	470R 5% 0,062W
3423	4822 051 30102	1,5K 5% 0,062W
3424	4822 051 30152	1,5K 5% 0,062W
3425	4822 051 30222	2,2K 5% 0,062W
3426	4822 116 52269	3,3K 5% 0,5W
3427	4822 051 30562	5,6K 5% 0,063W
3428	4822 051 30103	10K 5% 0,062W
3429	4822 051 30103	10K 5% 0,062W
3430	4822 051 30562	5,6K 5% 0,063W
3431	4822 051 30471	470R 5% 0,062W
3432	4822 051 30102	1K 5% 0,062W
3433	4822 051 30152	1,5K 5% 0,062W
3434	4822 051 30222	2,2K 5% 0,062W
3435	4822 051 30332	3,3K 5% 0,062W
3436	4822 051 30562	5,6K 5% 0,063W
3437	4822 051 30223	22K 5% 0,062W
3438	4822 051 30223	22K 5% 0,062W
3439	4822 051 30102	1K 5% 0,062W
3440	4822 050 11002	1K 1% 0,4W
3441	4822 051 30102	1K 5% 0,062W
3449	4822 051 30223	22K 5% 0,062W
3450	4822 051 30103	10K 5% 0,062W
3451	4822 051 30471	470R 5% 0,062W
3452	4822 051 30103	10K 5% 0,062W
3453	4822 051 30102	1K 5% 0,062W
3454	4822 051 30102	1K 5% 0,062W
3455	4822 051 30102	1K 5% 0,062W
3456	4822 051 30102	1K 5% 0,062W
3457	4822 050 21003	10K 1% 0,6W
3458	4822 051 30102	1K 5% 0,062W
3459	4822 051 30221	220R 5% 0,062W
3460	4822 051 30471	470R 5% 0,062W
3461	4822 051 30472	4,7K 5% 0,062W
3462	4822 051 30472	4,7K 5% 0,062W
3463	4822 051 30472	4,7K 5% 0,062W
3464	4822 051 30472	4,7K 5% 0,062W
3465	4822 051 30472	4,7K 5% 0,062W
3466	4822 051 30472	4,7K 5% 0,062W
3467	4822 051 30222	2,2K 5% 0,062W
3468	4822 051 30222	2,2K 5% 0,062W
3469	4822 051 30471	470R 5% 0,062W
3470	4822 116 52263	2,7K 5% 0,5W
3471	4822 051 30333	33K 5% 0,062W
3472	4822 051 30474	470R 5% 0,062W
3473	4822 051 30472	4,7K 5% 0,062W
3474	4822 051 30102	1K 5% 0,062W
3475	4822 051 30331	330R 5% 0,062W

ELECTRICAL PARTSLIST - FRONT, LED AND COMBI BOARD

- RESISTORS -

3476	4822 051 30471	470R 5% 0,062W
3477	4822 051 30471	470R 5% 0,062W
3478	4822 051 30471	470R 5% 0,062W
3479	4822 051 30471	470R 5% 0,062W
3480	4822 051 30102	1K 5% 0,062W
3481	4822 051 30471	470R 5% 0,062W
3482	4822 051 30102	1K 5% 0,062W
3483	4822 051 30153	15K 5% 0,062W
3484	4822 051 30103	10K 5% 0,062W
3485	4822 051 30392	3,9K 5% 0,063W
3486	4822 051 30101	100R 5% 0,062W
3487	4822 051 30392	3,9K 5% 0,063W
3488	4822 051 30101	100R 5% 0,062W
3489	4822 051 30102	1K 5% 0,062W
3490	4822 051 30102	1K 5% 0,062W
3491	4822 051 30102	1K 5% 0,062W
3492	4822 051 30102	1K 5% 0,062W
3493	4822 051 30102	1K 5% 0,062W
3494	4822 051 30102	1K 5% 0,062W
3496	4822 051 30154	150K 5% 0,062W
3498	4822 051 30103	10K 5% 0,062W
3499	4822 051 30223	22K 5% 0,062W
3500	4822 117 12968	820R 5% 0,62W
3501	4822 051 30471	470R 5% 0,062W
3502	4822 116 52256	2,2K 5% 0,5W
3503	4822 051 30471	470R 5% 0,062W
3505	4822 051 20333	33K 5% 0,1W
3506	4822 051 20333	33K 5% 0,1W
3507	4822 117 12971	15R 5% 0,62W
3508	4822 117 12971	15R 5% 0,62W
3509	4822 051 20333	33K 5% 0,1W
3510	4822 051 20333	33K 5% 0,1W
3511	4822 117 13632	100K 1% 0,62W
3512	4822 117 13632	100K 1% 0,62W
3513	4822 051 30153	15K 5% 0,062W
3514	4822 051 30153	15K 5% 0,062W
3515	4822 051 30333	33K 5% 0,062W
3516	4822 051 30333	33K 5% 0,062W
3517	4822 117 13632	100K 1% 0,62W
3518	4822 117 13632	100K 1% 0,62W
3519	4822 117 12891	220K 1%
3520	4822 117 12891	220K 1%
3521	4822 050 23303	33K 1% 0,6W
3522	4822 050 23303	33K 1% 0,6W
3523	4822 050 23303	33K 1% 0,6W
3524	4822 050 23303	33K 1% 0,6W
3525	4822 117 12891	220K 1%
3526	4822 117 12891	220K 1%
3527	4822 117 12891	220K 1%
3528	4822 117 12891	220K 1%

- RESISTORS -

3529	4822 116 52264	27K 5% 0,5W
3530	4822 116 52264	27K 5% 0,5W
3531	4822 116 52264	27K 5% 0,5W
3532	4822 116 52264	27K 5% 0,5W
3533	4822 051 30333	33K 5% 0,062W
3534	4822 051 30333	33K 5% 0,062W
3535	4822 117 13632	100K 1% 0,62W
3536	4822 117 13632	100K 1% 0,62W
3537	4822 117 12891	220K 1%
3538	4822 117 12891	220K 1%
3539	4822 051 30223	22K 5% 0,062W
3540	4822 051 30223	22K 5% 0,062W
3541	4822 051 30154	150K 5% 0,062W
3542	4822 051 30154	150K 5% 0,062W
3543	4822 117 12864	82K 5% 0,6W
3544	4822 117 12864	82K 5% 0,6W
3545	4822 051 30472	4,7K 5% 0,062W
3546	4822 051 30472	4,7K 5% 0,062W
3547	4822 051 30154	150K 5% 0,062W
3548	4822 051 30154	150K 5% 0,062W
3551	4822 051 30333	33K 5% 0,062W
3552	4822 051 30333	33K 5% 0,062W
3553	4822 117 12902	8,2K 1% 0,063W
3554	4822 117 12902	8,2K 1% 0,063W
3555	4822 051 30682	6,8K 5% 0,062W
3556	4822 051 30682	6,8K 5% 0,062W
3557	4822 051 30183	18K 5% 0,062W
3558	4822 051 30183	18K 5% 0,062W
3559	4822 051 30272	2,7K 5% 0,062W
3560	4822 051 30272	2,7K 5% 0,062W
3561	4822 050 21003	10K 1% 0,6W
3562	4822 050 21003	10K 1% 0,6W
3563	4822 117 11373	100R 1%
3565	4822 051 20109	10R 5% 0,1W
3566	4822 051 20109	10R 5% 0,1W
3567	4822 051 20109	10R 5% 0,1W
3568	4822 051 10102	1K 2% 0,25W
3572	4822 051 30103	10K 5% 0,062W
3573	4822 050 11002	1K 1% 0,4W
3574	4822 117 12925	47K 1% 0,063W
3575	4822 051 30153	15K 5% 0,062W
3576	4822 051 30153	15K 5% 0,062W
3577	4822 051 30471	470R 5% 0,062W
3578	4822 051 30471	470R 5% 0,062W
3579	4822 051 30154	150K 5% 0,062W
3580	4822 051 30154	150K 5% 0,062W
3581	4822 051 30272	2,7K 5% 0,062W
3582	4822 051 30272	2,7K 5% 0,062W
3583	4822 051 30472	2,7K 5% 0,062W
3584	4822 051 30472	2,7K 5% 0,062W

ELECTRICAL PARTSLIST - FRONT,LED AND COMBI BOARD

- RESISTORS -

3585	4822 051 30222	2,7K 5% 0,062W
3586	4822 051 30222	2,7K 5% 0,062W
3587	4822 051 30392	3,9K 5% 0,063W
3588	4822 051 30392	3,9K 5% 0,063W
3589	4822 116 83872	220R 5% 0,5W
3901	4822 051 20121	120R 5% 0,1W
3902	4822 051 20121	120R 5% 0,1W
3903	4822 051 20121	120R 5% 0,1W
3904	4822 051 20121	120R 5% 0,1W
3905	4822 117 12521	68R 1% 0,1W
4260	4822 051 10008	0R 5% 0,25W
4261	4822 051 10008	0R 5% 0,25W
4262	4822 051 20008	0R JUMPER(0805)
4263	4822 051 10008	0R 5% 0,25W
4264	4822 051 10008	0R 5% 0,25W
4265	4822 051 10008	0R 5% 0,25W
4266	4822 051 20008	0R JUMPER(0805)
4333	4822 051 20008	0R JUMPER(0805)
4334	4822 051 20008	0R JUMPER(0805)
4335	4822 051 20008	0R JUMPER(0805)
4401	4822 051 30008	0R JUMPER
4410	4822 051 10008	0R 5% 0,25W
4411	4822 051 10008	0R 5% 0,25W
4412	4822 051 30008	0R JUMPER
4413	4822 051 30008	0R JUMPER
4414	4822 051 10008	0R 5% 0,25W
4415	4822 051 10008	0R 5% 0,25W
4416	4822 051 30008	0R JUMPER
4419	4822 051 30008	0R JUMPER
4420	4822 051 30008	0R JUMPER
4510	4822 051 10008	0R 5% 0,25W
4512	4822 051 20008	0R JUMPER(0805)
4513	4822 051 20008	0R JUMPER(0805)
4560	4822 051 10008	0R 5% 0,25W
4561	4822 051 20008	0R JUMPER(0805)
4562	4822 051 10008	0R 5% 0,25W
4563	4822 051 10008	0R 5% 0,25W
4564	4822 051 10008	0R 5% 0,25W
4565	4822 051 10008	0R 5% 0,25W
4566	4822 051 20008	0R JUMPER(0805)
4567	4822 051 10008	0R 5% 0,25W
4568	4822 051 20008	0R JUMPER(0805)
4569	4822 051 10008	0R 5% 0,25W
4570	4822 051 20008	0R JUMPER(0805)
4571	4822 051 10008	0R 5% 0,25W
4572	4822 051 20008	0R JUMPER(0805)
4573	4822 051 10008	0R 5% 0,25W

- COILS & FILTERS -

5331	4822 157 11837	0,36µH 10% 5,6X5
5332	4822 157 11837	0,36µH 10% 5,6X5
5333	4822 157 11837	0,36µH 10% 5,6X5
5334	4822 157 11837	0,36µH 10% 5,6X5
5400	3198 018 11580	FXDIND A 1,5µH 5%
5401	3198 018 11580	FXDIND A 1,5µH 5%
5402	2422 540 98518	8MHZ CSTS*MG03
5403	2422 543 01069	RES XTL 32KHZ768
5550	4822 157 10686	CHOKE COIL 0,47UF
5551	4822 157 10686	CHOKE COIL 0,47UF

- DIODES -

6254	4822 130 31878	1N4003G
6255	4822 130 31878	1N4003G
6256	4822 130 31878	1N4003G
6257	4822 130 31878	1N4003G
6258	4822 130 31878	1N4003G
6259	4822 130 31878	1N4003G
6260	4822 130 31878	1N4003G
6261	4822 130 31878	1N4003G
6262	4822 130 31878	1N4003G
6263	4822 130 31878	1N4003G
6264	4822 130 31878	1N4003G
6265	4822 130 31878	1N4003G
6266	4822 130 30621	1N4148
6267	4822 130 30621	1N4148
6268	4822 130 34382	BZX79-B8V2
6271	4822 130 34278	BZX79-B6V8
6272	4822 130 61219	BZX79-B10
6275	3198 010 53380	BZX79-B3V3
6331	4822 130 30621	1N4148
6332	4822 130 30621	1N4148
6333	4822 130 30621	1N4148
6400	4822 130 30621	1N4148
6401	4822 130 30621	1N4148
6500	4822 130 30621	1N4148
6550	3198 010 53380	BZX79-B3V3
6901	9322 070 81682	TLHY4405
6902	9322 070 81682	TLHY4405
6903	9322 070 81682	TLHY4405
6904	9322 070 81682	TLHY4405
6905	9322 070 81682	TLHY4405
6906	9322 070 81682	TLHY4405
6907	9322 070 81682	TLHY4405
6908	9322 070 81682	TLHY4405
6909	9322 070 81682	TLHY4405
6910	9322 070 81682	TLHY4405

ELECTRICAL PARTSLIST - FRONT,LED AND COMBI BOARD

- DIODES -

6911	9322 070 81682	TLHY4405
6912	9322 070 81682	TLHY4405

- IC & TRANSISTORS -

7250	9322 139 24687	BDW94CFP
7251	5322 130 60159	BC846B
7252	5322 130 60159	BC846B
7253	5322 130 44647	BC368
7254	5322 130 44593	BC369
7255	5322 130 60159	BC846B
7256	4822 130 41246	BC327-25
7257	4822 130 41246	BC327-25
7258	4822 130 41246	BC327-25
7259	5322 130 60159	BC846B
7260	5322 130 60845	BC807-25
7261	5322 130 60159	BC846B
7330	9322 133 18682	AN7125P
7331	4822 130 60373	BC856B
7332	4822 130 60373	BC856B
7333	5322 130 60159	BC846B
7400	3140 110 51791	TMP87CP23F MC220
7402	5322 130 60159	BC846B
7403	5322 130 60159	BC846B
7404	9322 155 82667	IR RECEIVER TSOP2236
7405	9322 140 83682	M24C01-BN6
7500	4822 209 10264	HEF4069UBP
7501	4822 130 44568	BC557B
7502	4822 130 44568	BC557B
7503	4822 130 44568	BC557B
7504	4822 130 44568	BC557B
7505	5322 130 60159	BC846B
7506	5322 130 60159	BC846B
7507	5322 130 60159	BC846B
7508	5322 130 60159	BC846B
7509	5322 130 60159	BC846B
7510	5322 130 60159	BC846B
7511	5322 130 60159	BC846B
7512	5322 130 60159	BC846B
7513	5322 130 60159	BC846B
7514	5322 130 60159	BC846B
7550	4822 130 42804	BC817-25
7551	4822 209 10263	HEF4052BP
7552	5322 209 10421	HEF4094BP
7553	4822 130 41327	BC327-40
7555	5322 130 60159	BC846B
7556	5322 130 60159	BC846B

- MISCELLANEOUS -

6	4822 492 71733	CLAMP
7	4822 255 40179	CLIP
9	3140 114 29180	LCD HOLDER
1001	3139 110 35580	FFC Foil 05P/040/05P AD
1002	3139 110 35590	FFC Foil 08P/038/08P AD
8000	3140 110 22351	FFC Foil 16P/280/16P AD
8001	3140 110 21220	FFC Foil 06P/220/6P AD
8005	3140 110 21210	FFC Foil 6P/220/6P AD
8007	3140 110 21240	FFC Foil 8P/180/8P AD
8008	2422 070 98203	MAINSCORD 6A 1M8 (-/37)
8008	2422 070 98204	MAINSCORD 7A5 1M88 (-/30)
8008	2422 070 98203	MAINSCORD 6A 1M8(-/22)
8008	2422 070 98244	MAINSCORD 2A5 1M8 (-/21)
8009	3139 110 35900	FFC Foil 07P/220/07P AD
8010	3140 110 21840	FFC Foil 7P/120/7P AD

Note: These are NOT service parts,only for referrence.

ELECTRICAL PARTSLIST - TUNER BOARD ECO6 (Cenelec)

MISCELLANEOUS

1102	4822 267 10283	FM Ant. Socket
1103	4822 265 31184	AM Ant. Socket
1110	2422 542 90071	FM Frontend FE450-G01

CAPACITORS

2102	4822 126 14305	100nF 10% X7R 16V
2106	2020 800 00204	CTRM 4,2-20 pF N750
2107	4822 121 51319	1 F 10% 63V
2108	4822 122 31765	100pF 2% NP0 63V
2109	4822 122 33741	10pF 10% NP0 50V
2120	4822 122 33761	22pF 5% NP0 50V
2122	5322 126 11579	3,3nF 10% X7R 63V
2123	2238 861 18391	390pF 10% NP0 50V
2125	2238 861 18561	560pF 10% NP0 50V
2127	4822 126 13879	220nF +80-20% 16V
2128	4822 124 40248	10 F 20% 63V
2129	4822 124 41584	100 F 20% 10V
2130	4822 126 14494	22nF 10% X7R 25V
2131	3198 017 44740	470nF +80-20% 10V
2132	3198 017 44740	470nF +80-20% 10V
2133	4822 124 21913	1 F 20% 63V
2134	2020 552 94387	18nF 10% X7R 50V
2134	3198 017 31530	15nF 10% X7R 50V
2135	3198 017 31530	15nF 10% X7R 50V
2135	4822 122 33893	18nF10% X7R 63V
2136	4822 126 13879	220nF +80-20% 16V
2137	4822 126 13879	220nF +80-20% 16V
2138	4822 124 22652	2,2 F 20% 50V
2139	4822 122 33752	15pF 5% NP0 50V
2140	4822 126 14226	82pF 5% NP0 50V
2141	4822 126 14305	100nF 10% X7R 16V
2143	4822 126 13879	220nF +80-20% 16V
2144	4822 124 21913	1 F 20% 63V
2145	4822 126 13883	220pF 5% 50V
2146	4822 122 33575	220pF 5% NP0 63V
2147	4822 122 33575	220pF 5% NP0 63V
2148	4822 122 33127	2,2nF10% X7R 63V
2149	4822 126 11671	33pF 1% 50V
2150	4822 126 13838	100nF +80-20% 50V
2159	4822 126 11671	33pF 1% 50V
2162	4822 124 81151	22 F 20% 50V
2163	4822 126 14305	100nF 10% X7R 16V
2164	3198 017 44740	470nF +80-20% 10V
2165	4822 126 14305	100nF 10% X7R 16V
2166	5322 122 31647	1nF10% X7R 63V
2167	4822 126 11663	12pF 1% 50V
2169	4822 126 14238	2,2nF 20% X7R 50V
2180	5322 126 11583	10nF 10% X7R 50V
2191	4822 124 41584	100 F 20% 10V

RESISTORS

3105	4822 051 30221	220R 5% 0,1W
3108	4822 051 30222	2K2 5% 0,1W
3109	4822 051 30472	4K7 5% 0,1W
3123	4822 051 30472	4K7 5% 0,1W
3125	4822 051 30103	10K 5% 0,1W
3128	4822 051 30222	2K2 5% 0,1W
3130	4822 117 12968	820R 5% 0,6W
3131	4822 117 12968	820R 5% 0,6W
3132	4822 051 30479	47R 5% 0,1W
3134	4822 051 30223	22K 5% 0,1W
3135	4822 051 30102	1K 5% 0,1W
3137	4822 051 30223	22K 5% 0,1W
3141	4822 051 30563	56K 5% 0,1W
3142	4822 100 12159	100K 30%
3143	4822 051 30223	22K 5% 0,1W
3144	4822 051 30102	1K 5% 0,1W
3145	4822 051 30222	2K2 5% 0,1W
3146	4822 117 12139	22R 5% 0,1W
3150	4822 051 30103	10K 5% 0,1W
3151	4822 051 30683	68K 5% 0,1W
3152	4822 051 30471	470R 5% 0,1W
3153	4822 051 30471	470R 5% 0,1W
3154	4822 051 30331	330R 5% 0,1W
3155	4822 051 30151	150R 5% 0,1W
3158	4822 051 30471	470R 5% 0,1W
3159	4822 051 30471	470R 5% 0,1W
3160	4822 051 30471	470R 5% 0,1W
3161	4822 051 30223	22K 5% 0,1W
3167	4822 051 20121	120R 5% 0,1W
3168	4822 051 30121	120R 5% 0,1W
3169	4822 051 30154	150K 5% 0,1W
3171	4822 117 12925	47K 1% 0,1W
3172	4822 051 30562	5K6 5% 0,1W
3176	4822 051 30333	33K 5% 0,1W
3180	4822 051 30103	10K 5% 0,1W
3190	4822 051 30121	120R 5% 0,1W
3191	4822 051 30121	120R 5% 0,1W
3192	4822 051 30331	330R 5% 0,1W
3193	4822 051 30331	330R 5% 0,1W
3194	4822 051 30222	2K2 5% 0,1W
3195	4822 051 30101	100R 5% 0,1W
4105	4822 051 20008	0R Jumper 0805
4106	4822 051 30008	0R Jumper 0603
4107	4822 051 20008	0R Jumper 0805

ELECTRICAL PARTSLIST - TUNER BOARD ECO6 (Cenelec)

COILS AND FILTERS

5102	4822 157 71634	MW Aerial Coil
5103	2422 549 44107	LW Aerial Coil
5109	4822 157 71639	FM IF SFE10,7MJA10H-A
5110	4822 242 70665	FM IF SFE10,7MS3-A
5111	2422 549 44023	AM IF 7PY 450KHZ
5112	4822 157 70302	AM IF F7MCS-12216N
5114	4822 157 70302	AM IF F7MCS-12216N
5115	4822 157 71636	Birdie Filter Coil
5118	2422 535 95881	Inductor 0,1µH 5%
5119	4822 157 11443	FM Disc 2,4µH 10,7MHz
5121	4822 242 10261	Crystal 75KHz T6252F00
5122	2422 549 44108	MW Osc Coil
5123	2422 549 44108	LW Osc Coil

DIODES

6105	4822 130 83075	HN1V02H-B
6106	4822 130 83757	BAS216
6107	9340 386 90115	BZX284-C11
6120	4822 130 83757	BAS216

TRANSISTORS & IC

7101	9351 772 20557	TEA5762H/V1
7103	5322 130 42756	BC857C
7104	4822 130 40855	BC337
7105	4822 130 40855	BC337
7109	4822 130 60373	BC856B
7110	4822 130 60373	BC856B
7112	4822 130 44503	BC547C
7122	5322 130 42755	BC847C
7124	5322 130 42755	BC847C

Note: These are NOT service parts,only for referrence.

ELECTRICAL PARTSLIST - TUNER BOARD ECO6 (Non cenelec)

MISCELLANEOUS

1102	4822 267 10283	FM Ant. Socket
1103	4822 265 31184	AM Ant. Socket
1120	4822 265 11515	FFC Socket 8P

CAPACITORS

2101	4822 122 33777	47pF 5% NP0 63V
2102	4822 126 14305	100nF 10% X7R 16V
2103	5322 126 11578	1nF 10% X7R 50V
2104	4822 122 31765	100pF 2% NP0 63V
2106	2020 800 00191	CTRM 3P-11P N450
2107	4822 121 51319	1 F 10% 63V
2120	4822 126 14507	18pF 5% 50V
2124	4822 126 14494	22nF 10% X7R 25V
2125	2238 861 18561	560pF 1% NP0 50V
2126	4822 126 14241	330pF 10% NP0 50V
2127	4822 126 13879	220nF +80-20% 16V
2128	4822 124 40248	10 F 20% 63V
2129	4822 124 41584	100 F 20% 10V
2130	4822 126 14494	22nF 10% X7R 25V
2131	3198 017 44740	470nF +80-20% 10V
2132	3198 017 44740	470nF +80-20% 10V
2133	4822 124 21913	1 F 20% 63V
2134	3198 017 31530	15nF 20% X7R 50V
2135	3198 017 31530	15nF 20% X7R 50V
2136	4822 126 13879	220nF +80-20% 16V
2137	4822 126 13879	220nF +80-20% 16V
2138	4822 124 22652	2,2 F 20% 50V
2139	4822 122 33752	15pF 5% NP0 50V
2140	4822 126 14226	82pF 5% NP0 50V
2141	4822 126 14305	100nF 10% X7R 16V
2143	4822 126 13879	220nF +80-20% 16V
2144	4822 124 21913	1 F 20% 63V
2145	4822 126 13883	220pF 5% 50V
2146	4822 126 13883	220pF 5% 50V
2147	4822 126 13883	220pF 5% 50V
2148	4822 126 14238	2,2nF 10% X7R 50V
2150	4822 126 14585	100nF 10% X7R 50V
2152	4822 126 14549	33nF 10% 16V
2153	4822 122 33752	15pF 5% NP0 50V
2155	2020 800 00191	CTRM 3P-11P N450
2159	4822 126 11671	33pF 1% 50V
2164	3198 017 44740	470nF +80-20% 10V
2165	4822 126 14305	100nF 10% X7R 16V
2166	5322 126 11578	1nF 10% X7R 50V
2167	4822 126 11663	12pF 1% 50V

RESISTORS

3101	4822 051 30333	33K 5% 0,1W
3102	4822 117 13632	100K 1% 0,62W
3103	4822 117 12902	8K2 1% 0,1W
3104	4822 117 13577	330R 1% 0,25W
3105	4822 051 30221	220R 5% 0,1W
3132	4822 051 30479	47R 5% 0,1W
3134	4822 051 30223	22K 5% 0,1W
3141	4822 051 30563	56K 5% 0,1W
3142	4822 100 12159	100K 30% Var.
3145	4822 051 30222	2K2 5% 0,1W
3146	4822 117 12139	22R 5% 0,1W
3152	4822 051 30471	470R 5% 0,1W
3153	4822 051 30471	470R 5% 0,1W
3154	4822 051 30331	330R 5% 0,1W
3155	4822 051 30221	220R 5% 0,1W
3156	4822 117 13632	100K 1% 0,62W
3158	4822 051 30471	470R 5% 0,1W
3159	4822 051 30471	470R 5% 0,1W
3160	4822 051 30471	470R 5% 0,1W
3161	4822 051 20223	22K 5% 0,1W
3167	4822 051 20121	120R 5% 0,1W
3168	4822 051 30121	120R 5% 0,1W
3169	4822 051 30154	150K 5% 0,1W
3170	4822 117 13632	100K 1% 0,62W
3172	4822 051 30562	5K6 5% 0,1W
3181	4822 051 30102	1K 5% 0,1W
4103	4822 051 30008	0R Jumper 0603
4106	4822 051 20008	0R Jumper 0805
4107	4822 051 30008	0R Jumper 0603
4108	4822 051 30008	0R Jumper 0603

COILS AND FILTERS

5102	4822 157 71634	MW Aerial Coil
5109	4822 242 70665	FM IF SFE10,7MS3-A
5110	4822 242 70665	FM IF SFE10,7MS3-A
5111	2422 549 44023	AM IF 7PY 450KHZ
5112	4822 157 70302	AM IF F7MCS-12216N
5114	4822 157 70302	AM IF F7MCS-12216N
5119	4822 157 11443	FM Disr 2,4 H 10,7MHz
5121	4822 242 10261	Crystal 75KHz T6252F00
5123	2422 549 44108	MW Osc Coil
5130	4822 157 11843	FM RF Coil
5131	4822 157 11843	FM RF Coil

ELECTRICAL PARTSLIST - TUNER BOARD ECO6 (Non cenelec)

DIODES

6103	5322 130 34337	BAV99
6105	4822 130 83075	HN1V02H-B
6106	4822 130 83757	BAS216
6107	9340 386 90115	BZX284-C11
6130	4822 130 82833	1SV228
6131	4822 130 82833	1SV228

TRANSISTORS & IC

7101	9351 740 80557	TEA5757H/V1
7102	4822 130 42131	BF550
7111	5322 130 42755	BC847C
7112	4822 130 40959	BC547B

Note: These are NOT service parts,only for referrence.

ELECTRICAL PARTSLIST - ETF8 SD BOARD

- CAPACITORS -

2621	5322 126 11578	1nF 10% X7R 50V
2622	4822 126 13881	470pF 5% 50V
2623	4822 126 13881	470pF 5% 50V
2625	4822 126 14305	100nF 10% X7R 16V
2701	4822 122 31765	100pF 2% NP0 63V
2702	4822 122 31765	100pF 2% NP0 63V
2703	4822 122 31765	100pF 2% NP0 63V
2704	4822 122 31765	100pF 2% NP0 63V
2709	5322 126 11578	1nF 10% X7R 50V
2710	5322 126 11578	1nF 10% X7R 50V
2711	4822 122 31765	100pF 2% NP0 63V
2712	4822 122 31765	100pF 2% NP0 63V
2713	5322 121 42386	100nF 5% 63V
2714	5322 121 42386	100nF 5% 63V
2715	4822 124 41584	100 F 20% 10V
2716	4822 124 41584	100 F 20% 10V
2717	3198 017 31530	15nF 20% X7R 50V
2718	3198 017 31530	15nF 20% X7R 50V
2719	4822 126 14549	33nF 10% X7R 16V
2720	4822 126 14549	33nF 10% X7R 16V
2721	3198 017 41050	1 F 20% Y5V 10V
2722	3198 017 41050	1 F 20% Y5V 10V
2723	4822 126 14238	2,2nF 20% X7R 50V
2724	4822 126 14238	2,2nF 20% X7R 50V
2725	4822 126 13883	220pF 5% 50V
2727	4822 126 14238	2,2nF 20% X7R 50V
2728	4822 126 14238	2,2nF 20% X7R 50V
2729	4822 126 14494	22nF 10% X7R 25V
2730	4822 126 14494	22nF 10% X7R 25V
2731	5322 126 11578	1nF 10% X7R 50V
2732	3198 017 41050	1 F 20% Y5V 10V
2743	4822 126 14494	22nF 10% X7R 25V
2747	4822 126 14549	33nF 10% X7R 16V
2761	4822 124 40196	220 F 20% 16V
2768	4822 124 40756	1 F 20% 100V
2769	4822 126 14238	2,2nF 20% X7R 50V
2770	4822 126 14238	2,2nF 20% X7R 50V
2780	4822 124 81151	22 F 20% 50V
2781	5322 126 11583	10nF 10% X7R 50V
2782	4822 126 13193	4,7nF 10% X7R 63V
2784	4822 121 51305	15nF 10% 50V
2785	4822 124 21913	1 F 20% 63V
2786	4822 122 31765	100pF 2% NP0 63V
2787	4822 126 14549	33nF 10% X7R 16V
2782	4822 126 13193	4,7nF 10% X7R 63V
2784	4822 121 51305	15nF 10% 50V
2785	4822 124 21913	1 F 20% 63V
2786	4822 122 31765	100pF 2% NP0 63V
2787	4822 126 14549	33nF 10% X7R 16V
2788	4822 126 14494	22nF 10% X7R 25V

- CAPACITORS -

2789	4822 126 14549	33nF 10% X7R 16V
2790	4822 126 14247	1,5nF 20% X7R 50V
2791	4822 126 14247	1,5nF 20% X7R 50V
2793	4822 126 13883	220pF 5% 50V
2794	4822 126 13883	220pF 5% 50V
2795	4822 124 40756	1 F 20% 100V
2796	4822 124 40433	47 F 20% 25V
2797	4822 124 81151	22 F 20% 50V
2798	4822 124 21732	10 F 20% 25V
2799	4822 126 14305	100nF 10% X7R 16V

RESISTORS

2732	4822 117 11817	1,2K 1% 0,1W
3607	4822 051 30222	2,2K 5% 0,1W
3608	4822 051 30273	27K 5% 0,1W
3609	4822 051 30222	2,2K 5% 0,1W
3610	4822 051 20124	120K 5% 0,1W
3611	4822 051 30222	2,2K 5% 0,1W
3612	4822 051 30563	56K 5% 0,1W
3614	4822 051 30273	27K 5% 0,1W
3624	4822 117 13632	100K 1% 0.1W
3626	4822 051 30102	1K 5% 0,1W
3628	4822 117 13632	100K 1% 0.1W
3630	4822 051 30471	470R 5% 0,1W
3678	4822 117 12925	47K 1% 0,1W
3680	4822 117 12925	47K 1% 0,1W
3686	4822 117 13632	100K 1% 0.1W
3709	4822 051 30339	33R 5% 0,1W
3710	4822 051 30339	33R 5% 0,1W
3711	4822 051 30101	100R 5% 0,1W
3712	4822 051 30101	100R 5% 0,1W
3717	4822 117 11817	1,2K 1% 0,1W
3718	4822 117 11817	1,2K 1% 0,1W
3719	4822 051 30272	2,7K 5% 0,1W
3720	4822 051 30272	2,7K 5% 0,1W
3721	4822 051 30562	5,6K 5% 0,1W
3722	4822 051 30562	5,6K 5% 0,1W
3723	4822 051 30183	18K 5% 0,1W
3724	4822 051 30183	18K 5% 0,1W
3733	4822 051 30273	27K 5% 0,1W
3734	4822 051 30273	27K 5% 0,1W
3735	4822 051 30223	22K 5% 0,1W
3736	4822 051 30223	22K 5% 0,1W
3737	4822 051 30102	1K 5% 0,1W
3738	4822 051 30102	1K 5% 0,1W
3739	4822 117 12925	47K 1% 0,1W
3740	4822 117 12925	47K 1% 0,1W

ELECTRICAL PARTSLIST - ETF8 SD BOARD

RESISTORS

3743	4822 051 30563	56K 5% 0,1W
3744	4822 051 30563	56K 5% 0,1W
3745	4822 117 11817	1,2K 1% 0,1W
3746	4822 117 11817	1,2K 1% 0,1W
3749	4822 051 30121	120R 5% 0,1W
3750	4822 051 30121	120R 5% 0,1W
3762	4822 117 12968	820R 5% 0,1W
3764	4822 051 30181	180R 5% 0,1W
3768	4822 051 30103	10K 5% 0,1W
3769	4822 051 30223	22K 5% 0,1W
3770	4822 051 30152	1,5K 5% 0,1W
3771	4822 117 11817	1,2K 1% 0,1W
3772	4822 051 30153	15K 5% 0,1W
3774	4822 051 30183	18K 5% 0,1W
3775	4822 117 13608	4,7R 5% 0,1W
3776	4822 051 30682	6,8K 5% 0,1W
3777	4822 051 30151	150R 5% 0,1W
3778	4822 052 10688	6,8R 5% 0,33W
3779	4822 051 30334	330K 5% 0,1W
3780	4822 051 30105	1M 5% 0,1W
3781	4822 051 30475	4,7M 5% 0,1W
3786	4822 051 30223	22K 5% 0,1W
3789	4822 117 12925	47K 1% 0,1W
3790	4822 051 30223	22K 5% 0,1W
3791	4822 051 30273	27K 5% 0,1W
3792	4822 117 12925	47K 1% 0,1W
3793	4822 117 12925	47K 1% 0,1W
3794	4822 051 30102	1K 5% 0,1W
3795	4822 051 30102	1K 5% 0,1W
3796	4822 051 30475	4,7M 5% 0,1W
3797	4822 051 30563	56K 5% 0,1W
3800	4822 051 30273	27K 5% 0,1W
4701	4822 051 30008	0R JUMPER 0603
4702	4822 051 30008	0R JUMPER 0603
4705	4822 051 30008	0R JUMPER 0603
4707	4822 051 30008	0R JUMPER 0603
4708	4822 051 30008	0R JUMPER 0603
4709	4822 051 30008	0R JUMPER 0603
4710	4822 051 30008	0R JUMPER 0603
4711	4822 051 30008	0R JUMPER 0603
4712	4822 051 30008	0R JUMPER 0603
4718	4822 051 30008	0R JUMPER 0603
4719	4822 051 30008	0R JUMPER 0603
4720	4822 051 30008	0R JUMPER 0603
4721	4822 051 30008	0R JUMPER 0603
4723	4822 051 30008	0R JUMPER 0603
4725	4822 051 30008	0R JUMPER 0603
4726	4822 051 30008	0R JUMPER 0603
4727	4822 051 30008	0R JUMPER 0603
4729	4822 051 30008	0R JUMPER 0603

RESISTORS

4730	4822 051 30008	0R JUMPER 0603
4731	4822 051 30008	0R JUMPER 0603
4732	4822 051 30008	0R JUMPER 0603
4733	4822 051 30008	0R JUMPER 0603
4734	4822 051 30008	0R JUMPER 0603
4735	4822 051 30008	0R JUMPER 0603
4738	4822 051 30008	0R JUMPER 0603
4739	4822 051 30008	0R JUMPER 0603
4741	4822 051 30008	0R JUMPER 0603
4746	4822 051 30008	0R JUMPER 0603
4747	4822 051 30008	0R JUMPER 0603

COILS & FILTERS

5701	4822 157 62552	Coil 2,2 H 5%
5703	4822 156 20946	Osc Coil 100MHz

DIODES

6612	4822 130 31878	1N4003G
6770	4822 130 30621	1N4148
6771	4822 130 30621	1N4148
6772	4822 130 30621	1N4148
6773	4822 130 30621	1N4148
6774	4822 130 30621	1N4148
6776	4822 130 30621	1N4148
6777	3198 010 58280	BZX79-B8V2
6778	4822 130 30621	1N4148

TRANSISTORS & IC

7610	5322 209 11306	HEF4094BT
7612	4822 130 11201	PMBT2907
7614	4822 130 11201	PMBT2907
7618	4822 130 60511	BC847B
7620	4822 130 60511	BC847B
7624	4822 130 60511	BC847B
7720	9322 167 09668	AN17150ATA
7780	4822 130 60511	BC847B
7781	4822 130 42804	BC817-25
7782	4822 130 44568	BC557B
7783	4822 130 60511	BC847B
7784	4822 130 60373	BC856B
7786	4822 130 63494	FET J111
7788	4822 130 60511	BC847B
7789	4822 130 60511	BC847B
7790	4822 130 60511	BC847B

ELECTRICAL PARTSLIST - ETF8 SD BOARD

MISCELLANEOUS

1701	4822 267 10953	FFC Socket 7 pin Ver.
1706	4822 267 10953	FFC Socket 7 pin Ver.
1710	4822 267 10958	FFC Socket 5 pin Hor.
1760	4822 265 11535	FFC Socket 8 pin Hor.

Note: These are NOT service parts,only for referrence.

ELECTRICAL PARTSLIST - CD99/ DA11 BOARD

MISCELLANEOUS

1800	4822 265 10925	FFC Socket 15P
1823	4822 265 11207	FFC Socket 6P
1824	4822 265 11207	FFC Socket 6P

CAPACITORS

2801	4822 124 41751	47 F 20% 50V
2802	4822 124 41751	47 F 20% 50V
2803	4822 126 14226	82pF 5% NP0 50V
2804	4822 126 14226	82pF 5% NP0 50V
2805	4822 126 14226	82pF 5% NP0 50V
2806	4822 126 13695	82pF 1% NP0 63V
2807	4822 126 11669	27pF 5% 50V
2808	5322 122 33538	150pF 2% NP0 63V
2809	4822 126 11669	27pF 5% 50V
2810	4822 126 13692	47pF 1% NP0 63V
2811	4822 126 11671	33pF 5% 50V
2812	4822 122 33741	10pF 10% NP0 50V
2813	4822 126 14238	2,2nF X7R 50V
2814	3198 024 44730	47nF Y5V 50V
2815	4822 122 33777	47pF 5% NP0 63V
2816	5322 122 32654	22nF 10% 63V
2817	4822 124 40769	4,7 F 20% 100V
2818	3198 024 44730	47nF Y5V 50V
2821	4822 126 14305	100nF 10% X7R 16V
2822	4822 126 13344	1,5nF 5% 63V
2823	4822 124 42383	220 F 20% 4V
2824	4822 126 13751	47nF 10% X7R 63V
2825	4822 126 13344	1,5nF 5% 63V
2826	3198 024 44730	47nF Y5V 50V
2827	5322 126 11578	1nF 10% X7R 50V
2828	4822 122 33777	47pF 5% NP0 63V
2829	3198 024 44730	47nF Y5V 50V
2830	3198 017 41050	1 F Y5V 10V
2831	4822 126 14043	1 F +80-20% 16V
2832	4822 122 33753	150pF 5% NP0 50V
2833	4822 126 13881	470pF 5% 50V
2834	4822 126 14506	270pF 5% 50V
2835	4822 126 13881	470pF 5% 50V
2836	4822 124 41751	47 F 20% 50V
2837	3198 024 44730	47nF Y5V 50V
2838	3198 017 42230	22nF Y5V 50V
2839	4822 126 14305	100nF 10% X7R 16V
2840	4822 124 41751	47 F 20% 50V
2841	4822 126 13751	47nF 10% X7R 63V
2842	4822 124 21913	1 F 20% 63V
2843	4822 122 31765	100pF 2% NP0 63V
2844	4822 126 13883	220pF 5% 50V
2845	4822 126 13883	220pF 5% 50V
2846	4822 124 40248	10 F 20% 63V
2848	4822 122 31765	100pF 2% NP0 63V

CAPACITORS

2849	4822 126 13883	220pF 5% 50V
2850	4822 126 13883	220pF 5% 50V
2851	4822 124 40248	10 F 20% 63V
2853	5322 126 11583	10nF 10% X7R 50V
2854	4822 124 11912	220 F 20% 6,3V
2855	4822 124 11912	220 F 20% 6,3V
2857	4822 124 12362	47 F 20% 4V
2860	5322 116 80853	560pF 5% 63V
2861	4822 126 13344	1,5nF 5% 63V
2862	4822 126 14508	180pF 5% 50V
2863	4822 126 14508	180pF 5% 50V
2864	4822 126 14508	180pF 5% 50V
2865	4822 126 14508	180pF 5% 50V
2869	3198 024 44730	47nF Y5V 50V
2870	4822 126 13883	220pF 5% 50V
2871	4822 126 13883	220pF 5% 50V
2872	4822 126 13883	220pF 5% 50V
2873	4822 126 13883	220pF 5% 50V
2874	4822 126 13883	220pF 5% 50V
2875	4822 126 13883	220pF 5% 50V

RESISTORS

3728	4822 051 20479	47R 5% 0,1W
3745	4822 051 30338	3R3 5% 0,1W
3757	4822 051 20223	22K 5% 0,1W
3788	4822 051 20472	4K7 5% 0,1W
3800	4822 117 13608	4R7 5% 0,1W
3801	4822 051 30154	150K 5% 0,1W
3802	4822 051 30102	1K 5% 0,1W
3803	4822 051 30273	27K 5% 0,1W
3804	4822 051 30472	4K7 5% 0,1W
3805	4822 051 30273	27K 5% 0,1W
3806	4822 117 10361	680R 1% 0,1W
3807	4822 051 30152	1K5 5% 0,1W
3808	4822 051 30339	33R 5% 0,1W
3809	4822 051 30339	33R 5% 0,1W
3810	4822 052 10478	4R7 5% 0,33W
3811	4822 051 30102	1K 5% 0,1W
3812	4822 051 30474	470K 5% 0,1W
3813	4822 051 30683	68K 5% 0,1W
3814	4822 051 30332	3K3 5% 0,1W
3815	4822 051 30472	4K7 5% 0,1W
3816	4822 051 30153	15K 5% 0,1W
3817	4822 117 10834	47K 1% 0,1W
3818	4822 051 20562	5K6 5% 0,1W
3819	4822 051 30153	15K 5% 0,1W
3820	4822 051 30183	18K 5% 0,1W

ELECTRICAL PARTSLIST - CD99/ DA11 BOARD

RESISTORS

3821	4822 051 20332	3K3 5% 0,1W
3822	4822 051 30332	3K3 5% 0,1W
3823	4822 051 20332	3K3 5% 0,1W
3824	4822 051 30102	1K 5% 0,1W
3825	4822 051 30223	22K 5% 0,1W
3826	4822 051 30273	27K 5% 0,1W
3827	4822 051 20339	33R 5% 0,1W
3828	4822 051 20479	47R 5% 0,1W
3829	4822 051 30101	100R 5% 0,1W
3830	4822 051 30472	4K7 5% 0,1W
3835	4822 051 30223	22K 5% 0,1W
3836	4822 117 10833	10K 1% 0,1W
3837	4822 051 20471	470R 5% 0,1W
3838	4822 051 20471	470R 5% 0,1W
3839	4822 051 30471	470R 5% 0,1W
3840	4822 051 30471	470R 5% 0,1W
3841	4822 051 30472	4K7 5% 0,1W
3842	4822 051 10102	1K 2% 0,25W
3843	4822 051 30102	1K 5% 0,1W
3844	4822 051 30101	100R 5% 0,1W
3845	2120 108 92668	3R3 5% 0,1W
3846	4822 051 20223	22K 5% 0,1W
3847	4822 117 12864	82K 5% 0,6W
3848	4822 117 10834	47K 1% 0,1W
3849	4822 051 30563	56K 5% 0,1W
3850	4822 117 12902	8K2 1% 0,1W
3851	4822 051 30563	56K 5% 0,1W
3852	4822 117 10834	47K 1% 0,1W
3853	4822 051 30153	15K 5% 0,1W
3854	4822 117 12902	8K2 1% 0,1W
3855	4822 116 40227	4R6 25% 12V
3856	4822 051 20683	68K 5% 0,1W
3857	4822 051 20154	150K 5% 0,1W
3858	4822 051 30392	3K9 5% 0,1W
3859	4822 117 10834	47K 1% 0,1W
3860	4822 051 30102	1K 5% 0,1W
3861	4822 117 10834	47K 1% 0,1W
3862	4822 051 10102	1K 2% 0,25W
3863	4822 052 10338	3R3 5% 0,33W
3864	4822 117 10833	10K 1% 0,1W
3865	4822 051 30102	1K 5% 0,1W
3867	4822 051 20223	22K 5% 0,1W
3868	4822 051 30103	10K 5% 0,1W
3869	4822 051 30103	10K 5% 0,1W
3871	4822 051 30471	470R 5% 0,1W
3872	4822 117 12925	47K 1% 0,1W
3873	4822 051 30223	22K 5% 0,1W
3874	4822 051 30223	22K 5% 0,1W
3875	4822 051 30103	10K 5% 0,1W
3876	4822 051 30103	10K 5% 0,1W

RESISTORS

3878	4822 051 30471	470R 5% 0,1W
3879	4822 117 12925	47K 1% 0,1W
3880	4822 051 20339	33R 5% 0,1W
3881	4822 051 30151	150R 5% 0,1W
3882	4822 117 11373	100R 1% 0.1W
3883	4822 051 30102	1K 5% 0,1W
3884	4822 051 30102	1K 5% 0,1W
3886	4822 117 10833	10K 1% 0,1W
3887	4822 117 10833	10K 1% 0,1W
3888	4822 051 20472	4K7 5% 0,1W
3889	4822 051 30102	1K 5% 0,1W
3890	4822 117 10837	100K 1% 0,1W
3891	4822 117 10837	100K 1% 0,1W
3892	4822 117 13632	100K 1% 0,62W
3893	4822 117 13632	100K 1% 0,62W
3894	4822 117 10833	10K 1% 0,1W
3895	4822 117 10833	10K 1% 0,1W
3896	4822 117 10833	10K 1% 0,1W
3897	4822 117 10833	10K 1% 0,1W
3898	4822 117 10833	10K 1% 0,1W
3899	4822 117 10833	10K 1% 0,1W
3900	4822 051 30223	22K 5% 0,1W
4801	4822 051 30008	0R Jumper 0603
4802	4822 051 20008	0R Jumper 0805
4807	4822 051 20008	0R Jumper 0805
4808	4822 051 30008	0R Jumper 0603
4809	4822 051 20008	0R Jumper 0805
4810	4822 051 20008	0R Jumper 0805
4812	4822 051 20008	0R Jumper 0805
4813	4822 051 20008	0R Jumper 0805
4814	4822 051 20008	0R Jumper 0805
4815	4822 051 20008	0R Jumper 0805
4823	4822 051 20008	0R Jumper 0805
4824	4822 051 20008	0R Jumper 0805
4828	4822 051 20008	0R Jumper 0805
4831	4822 051 20008	0R Jumper 0805
4832	4822 051 20008	0R Jumper 0805
4838	4822 051 20008	0R Jumper 0805
4845	4822 051 20008	0R Jumper 0805
4847	4822 051 20008	0R Jumper 0805
4848	4822 051 20008	0R Jumper 0805
4850	4822 051 20008	0R Jumper 0805
4853	4822 051 20008	0R Jumper 0805
4856	4822 051 30008	0R Jumper 0603
4857	4822 051 20008	0R Jumper 0805
4859	4822 051 20008	0R Jumper 0805
4863	4822 051 20008	0R Jumper 0805
4865	4822 051 20008	0R Jumper 0805
4866	4822 051 20008	0R Jumper 0805
4872	4822 051 20008	0R Jumper 0805

ELECTRICAL PARTSLIST - CD99/DA11 BOARD

RESISTORS

4877	4822 051 30008	0R Jumper 0603
4881	4822 051 20008	0R Jumper 0805
4884	4822 051 20008	0R Jumper 0805
4885	4822 051 30008	0R Jumper 0603
4886	4822 051 20008	0R Jumper 0805
4888	4822 051 20008	0R Jumper 0805
4889	4822 051 20008	0R Jumper 0805

COILS AND FILTERS

1810	4822 242 73557	CST8,46MTW-TF01
5803	4822 157 11231	1μH 5%

DIODES

6877	9322 129 34685	BZM55-C3V9

TRANSISTORS & IC

7800	9352 690 17557	SAA7325H/T/M2B/WD
7802	5322 209 11517	PC74HCU04T
7803	5322 130 60123	BC807-40
7804	5322 209 82941	LM358D
7807	5322 130 42755	BC847C
7808	4822 209 32852	TDA7073A/N2
7809	4822 209 32852	TDA7073A/N2
7810	4822 209 33165	TDA1308T/N1
7875	4822 130 60511	BC847B

Note: These are NOT service parts,only for referrence.

ELECTRICAL PARTSLIST - COMBI BOARD

- MISCELLANEOUS -

6	4822 492 71733	CLAMP
7	4822 255 40179	CLIP
9	3140 114 29180	LCD HOLDER
1330	2422 026 05099	CONNECTOR PHONE 1P
1331	4822 267 31176	CONNECTOR
1400	4822 276 13775	SWITCH-PUSH
1401	4822 276 13775	SWITCH-PUSH
1402	4822 276 13775	SWITCH-PUSH
1403	4822 276 13775	SWITCH-PUSH
1404	4822 276 13775	SWITCH-PUSH
1405	4822 276 13775	SWITCH-PUSH
1406	4822 276 13775	SWITCH-PUSH
1407	4822 276 13775	SWITCH-PUSH
1408	4822 276 13775	SWITCH-PUSH
1409	4822 276 13775	SWITCH-PUSH
1410	4822 276 13775	SWITCH-PUSH
1411	4822 276 13775	SWITCH-PUSH
1412	4822 276 13775	SWITCH-PUSH
1413	4822 276 13775	SWITCH-PUSH
1414	4822 276 13775	SWITCH-PUSH
1415	2422 129 16349	ROT ENCODER 24P
1416	2422 025 14546	CONNECTOR FFC 16P
1418	4822 265 11207	CONNECTOR SOCKET 6P
1420	4822 267 10956	CONNECTOR 7P
1425	3140 110 51000	LCD PANEL
1550	4822 265 20553	CONNECTOR
1551	4822 267 10953	CONNECTOR 7P
1554	4822 267 10731	CONNECTOR
1555	4822 265 11515	CONNECTOR 8P
1556	2422 025 14526	CONNECTOR FFC 16P

- CAPACITORS -

2251	5322 121 42386	100nF 5% 63V
2252	5322 121 42386	100nF 5% 63V
2253	5322 121 42386	100nF 5% 63V
2254	5322 121 42386	100nF 5% 63V
2256	4822 124 81151	22 F 50V
2257	4822 124 40248	10 F 20% 63V
2258	4822 124 40769	4,7 F 20% 100V
2259	4822 124 40769	4,7 F 20% 100V
2260	3198 017 34730	47nF X7R 16V
2262	3198 016 31020	1nF NP0 25V
2264	4822 124 40248	10 F 20% 63V
2265	4822 124 40207	100 F 20% 25V
2266	2238 586 59812	100nF +80-20% Y5V 50V
2267	4822 124 40784	3300 F 20% 16V
2268	4822 124 12012	4700 F 20% 25V

- CAPACITORS -

2330	4822 124 40769	4,7 F 20% 100V
2331	2238 786 19852	150nF +80-20% Y5V 16V
2332	2238 786 19852	150nF +80-20% Y5V 16V
2337	4822 121 42408	220nF 5% 63V
2338	4822 121 42408	220nF 5% 63V
2339	4822 121 42408	220nF 5% 63V
2340	4822 121 42408	220nF 5% 63V
2341	4822 124 40433	47 F 20% 25V
2342	4822 124 40433	47 F 20% 25V
2343	4822 122 33197	1nF 10% 50V
2344	4822 122 33197	1nF 10% 50V
2345	4822 126 14494	22nF 10% X7R 25V
2346	4822 126 14494	22nF 10% X7R 25V
2347	4822 124 40433	47 F 20% 25V
2348	4822 124 40433	47 F 20% 25V
2349	4822 124 40207	100 F 20% 25V
2350	4822 124 40207	100 F 20% 25V
2351	4822 124 40769	4,7 F 20% 100V
2352	4822 124 40433	47 F 20% 25V
2353	5322 126 11583	10nF 10% X7R 50V
2354	5322 126 11583	10nF 10% X7R 50V
2400	5322 126 11583	10nF 10% X7R 50V
2401	5322 126 11583	10nF 10% X7R 50V
2402	4822 124 23432	100 F 20% 10V
2403	2238 586 59812	100nF +80-20% Y5V 50V
2404	4822 124 23432	100 F 20% 10V
2405	5322 126 11583	10nF 10% X7R 50V
2406	5322 126 11583	10nF 10% X7R 50V
2407	2238 586 59812	100nF +80-20% Y5V 50V
2408	2238 586 59812	100nF +80-20% Y5V 50V
2409	5322 126 11583	10nF 10% X7R 50V
2410	5322 126 11583	10nF 10% X7R 50V
2411	4822 122 33752	15pF 5% NP0 50V
2412	4822 122 33752	15pF 5% NP0 50V
2413	4822 126 11785	47pF 5% NP0 50V
2414	5322 126 11583	10nF 10% X7R 50V
2415	4822 126 11669	27pF
2416	4822 126 11669	27pF
2417	4822 124 40433	47 F 20% 25V
2418	5322 126 11578	1nF 10% X7R 50V
2419	2238 586 59812	100nF +80-20% Y5V 50V
2420	5322 126 11583	10nF 10% X7R 50V
2421	5322 126 11583	10nF 10% X7R 50V
2422	2020 552 94427	100pF 5% NP0 50V
2423	2020 552 94427	100pF 5% NP0 50V
2424	2238 586 59812	100nF +80-20% Y5V 50V
2425	2222 867 15339	33pF 5% NP0 50V
2426	4822 122 33761	22pF 5% NP0 50V
2427	4822 126 14249	560pF 10% X7R 50V
2428	4822 124 22652	2,2 F 20% 50V

ELECTRICAL PARTSLIST - COMBI BOARD

- CAPACITORS -

2429	4822 126 12787	330pF 10% Y5V 50V
2430	5322 126 11578	1nF 10% X7R 50V
2431	4822 126 13193	4,7nF 10% X7R 63V
2432	2020 552 94427	100pF 5% NP0 50V
2433	4822 126 13881	470pF 5% 50V
2434	2020 552 94427	100pF 5% NP0 50V
2435	4822 126 13881	470pF 5% 50V
2436	4822 126 13881	470pF 5% 50V
2437	4822 126 13881	470pF 5% 50V
2438	4822 126 13881	470pF 5% 50V
2439	4822 126 13881	470pF 5% 50V
2440	4822 126 14238	2,2nF X7R 50V
2441	5322 126 11583	10nF 10% X7R 50V
2442	4822 126 13883	220pF 5% 50V
2443	4822 126 13883	220pF 5% 50V
2444	4822 126 13883	220pF 5% 50V
2445	4822 126 13883	220pF 5% 50V
2446	5322 126 11583	10nF 10% X7R 50V
2447	4822 126 13881	470pF 5% 50V
2448	4822 126 13881	470pF 5% 50V
2449	4822 126 13881	470pF 5% 50V
2450	4822 126 13881	470pF 5% 50V
2451	4822 126 13881	470pF 5% 50V
2500	4822 124 41584	100 F 20% 10V
2501	4822 124 40196	220 F 20% 16V
2502	4822 124 40248	10 F 20% 63V
2503	4822 126 14494	22nF 10% X7R 25V
2505	2020 552 94427	100pF 5% NP0 50V
2506	2020 552 94427	100pF 5% NP0 50V
2507	2020 552 94427	100pF 5% NP0 50V
2508	2020 552 94427	100pF 5% NP0 50V
2509	4822 122 33761	22pF 5% NP0 50V
2510	4822 122 33761	22pF 5% NP0 50V
2511	4822 126 13879	220nF +80-20% 16V
2512	4822 126 13879	220nF +80-20% 16V
2513	4822 126 11785	47pF 5% NP0 50V
2514	4822 126 11785	47pF 5% NP0 50V
2515	5322 126 11583	10nF 10% X7R 50V
2516	5322 126 11583	10nF 10% X7R 50V
2517	4822 126 14247	1,5nF X7R 50V
2518	4822 126 14247	1,5nF X7R 50V
2519	4822 126 13883	220pF 5% 50V
2520	4822 126 13883	220pF 5% 50V
2521	4822 126 14247	1,5nF X7R 50V
2522	4822 126 14247	1,5nF X7R 50V
2523	3198 016 36810	680pF NP0 25V
2524	3198 016 36810	680pF NP0 25V
2525	4822 126 11785	47pF 5% NP0 50V
2526	4822 126 11785	47pF 5% NP0 50V
2527	5322 126 11583	10nF 10% X7R 50V

- CAPACITORS -

2528	5322 126 11583	10nF 10% X7R 50V
2529	2238 586 59812	100nF +80-20% Y5V 50V
2530	2238 586 59812	100nF +80-20% Y5V 50V
2531	2238 586 59812	100nF +80-20% Y5V 50V
2532	2238 586 59812	100nF +80-20% Y5V 50V
2533	3198 017 34730	47nF X7R 16V
2534	3198 017 34730	47nF X7R 16V
2535	2238 586 59812	100nF +80-20% Y5V 50V
2536	2238 586 59812	100nF +80-20% Y5V 50V
2550	4822 126 11585	22nF+80-20% Y5V 25V
2551	4822 126 14238	2,2nF X7R 50V
2552	4822 126 14238	2,2nF X7R 50V
2553	4822 126 14494	22nF 10% X7R 25V
2554	4822 124 40196	220 F 20% 16V
2555	4822 124 22652	2,2 F 20% 50V
2557	3198 017 44740	470nF Y5V 10V
2558	4822 126 13883	220pF 5% 50V
2559	4822 126 13883	220pF 5% 50V
2560	4822 126 13883	220pF 5% 50V
2561	4822 124 81151	22 F 50V
2563	4822 124 41407	0,47 F 20% 63V
2564	4822 124 41407	0,47 F 20% 63V
2565	2020 552 94427	100pF 5% NP0 50V
2566	2020 552 94427	100pF 5% NP0 50V
2567	4822 124 22652	2,2 F 20% 50V
2568	4822 124 22652	2,2 F 20% 50V
2569	4822 124 21913	1 F 20% 63V
2570	4822 124 21913	1 F 20% 63V
2571	3198 017 44740	470nF Y5V 10V
2573	2238 586 59812	100nF +80-20% Y5V 50V

- RESISTORS -

3250	4822 051 20471	470R 5% 0,1W
3251	4822 051 30222	2,2K 5% 0,062W
3252	4822 051 20472	4,7K 5% 0,1W
3253	4822 051 20472	4,7K 5% 0,1W
3254	4822 117 11449	2,2K 5% 0,1W
3255	4822 050 11002	1K 1% 0,4W
3256	4822 050 11002	1K 1% 0,4W
3257	4822 050 11002	1K 1% 0,4W
3258	4822 116 83884	47K 5% 0,5W
3259	4822 051 30331	330R 5% 0,062W
3260	4822 117 12891	220K 1% ERJ3E
3261	4822 117 12864	82K 5% 0,6W
3262	4822 051 10102	1K 2% 0,25W
3263	4822 051 30472	4,7K 5% 0,062W
3264	4822 051 10102	1K 2% 0,25W

ELECTRICAL PARTSLIST - COMBI BOARD

- RESISTORS -

3266	4822 117 12925	47K 1% 0,063W
3267	4822 117 11449	2,2K 5% 0,1W
3268	4822 117 11449	2,2K 5% 0,1W
3269	4822 051 30223	22K 5% 0,062W
3271	4822 050 24708	4,7R 1% 0,6W
3272	4822 050 24708	4,7R 1% 0,6W
3273	4822 050 24708	4,7R 1% 0,6W
3274	4822 051 20391	390R 5% 0,1W
3275	4822 116 83883	470R 5% 0,5W
3276	4822 051 30222	2,2K 5% 0,062W
3277	4822 051 30222	2,2K 5% 0,062W
3278	4822 117 12925	47K 1% 0,063W
3279	4822 051 30102	1K 5% 0,062W
3280	4822 116 52257	22K 5% 0,5W
3281	4822 117 11449	2,2K 5% 0,1W
3282	4822 117 11449	2,2K 5% 0,1W
3283	4822 117 11449	2,2K 5% 0,1W
3284	4822 117 11449	2,2K 5% 0,1W
3330	4822 116 52269	3,3K 5% 0,5W
3331	4822 050 21003	10K 1% 0,6W
3332	4822 050 21003	10K 1% 0,6W
3333	4822 051 30682	6,8K 5% 0,062W
3334	4822 051 30682	6,8K 5% 0,062W
3335	4822 051 20228	2,2R 5% 0,1W
3336	4822 051 20228	2,2R 5% 0,1W
3337	4822 051 20228	2,2R 5% 0,1W
3338	4822 051 20228	2,2R 5% 0,1W
3339	4822 051 20121	120R 5% 0,1W
3340	4822 051 20121	120R 5% 0,1W
3341	4822 116 52226	560R 5% 0,5W
3342	4822 116 52226	560R 5% 0,5W
3343	4822 051 30103	10K 5% 0,062W
3344	4822 051 30103	10K 5% 0,062W
3345	4822 051 30103	10K 5% 0,062W
3346	4822 051 30103	10K 5% 0,062W
3347	4822 051 30223	22K 5% 0,062W
3348	4822 051 30223	22K 5% 0,062W
3349	4822 051 30223	22K 5% 0,062W
3350	4822 117 12925	47K 1% 0,063W
3351	4822 051 10102	1K 2% 0,25W
3352	4822 051 10102	1K 2% 0,25W
3353	4822 051 20479	47R 5% 0,1W
3358	4822 051 30472	4,7K 5% 0,062W
3359	4822 051 30682	6,8K 5% 0,062W
3360	4822 117 13632	100K 1% 0,62W
3361	4822 051 30101	100R 5% 0,062W
3400	4822 116 52176	10R 5% 0,5W
3401	4822 116 52182	15R 5% 0,5W
3402	4822 116 52175	100R 5% 0,5W
3403	4822 051 30682	6,8K 5% 0,062W

- RESISTORS -

3404	4822 051 30332	3,3K 5% 0,062W
3405	4822 050 11002	1K 1% 0,4W
3406	4822 117 13632	100K 1% 0,62W
3407	4822 051 30102	1K 5% 0,062W
3408	4822 051 30474	470K 5% 0,062W
3409	4822 051 30103	10K 5% 0,062W
3410	4822 116 52175	100R 5% 0,5W
3411	4822 117 13632	100K 1% 0,62W
3412	4822 051 30103	10K 5% 0,062W
3413	4822 051 30102	1K 5% 0,062W
3414	4822 051 30333	33K 5% 0,062W
3415	4822 051 30153	15K 5% 0,062W
3416	4822 116 83872	220R 5% 0,5W
3417	4822 051 30153	15K 5% 0,062W
3418	4822 051 30152	1,5K 5% 0,062W
3419	4822 051 30152	1,5K 5% 0,062W
3420	4822 050 21003	10K 1% 0,6W
3421	4822 051 30562	5,6K 5% 0,063W
3422	4822 116 83883	470R 5% 0,5W
3423	4822 050 11002	1K 1% 0,4W
3424	4822 051 30152	1,5K 5% 0,062W
3425	4822 051 30222	2,2K 5% 0,062W
3426	4822 051 30332	3,3K 5% 0,062W
3427	4822 051 30562	5,6K 5% 0,063W
3428	4822 051 30103	10K 5% 0,062W
3429	4822 050 21003	10K 1% 0,6W
3430	4822 051 30562	5,6K 5% 0,063W
3431	4822 051 30471	470R 5% 0,062W
3432	4822 051 30102	1K 5% 0,062W
3433	4822 051 30152	1,5K 5% 0,062W
3434	4822 051 30222	2,2K 5% 0,062W
3435	4822 051 30332	3,3K 5% 0,062W
3436	4822 051 30562	5,6K 5% 0,063W
3437	4822 051 30223	22K 5% 0,062W
3438	4822 051 30223	22K 5% 0,062W
3439	4822 051 30102	1K 5% 0,062W
3440	4822 051 30102	1K 5% 0,062W
3441	4822 051 30102	1K 5% 0,062W
3442	4822 051 30333	33K 5% 0,062W
3443	4822 050 23303	33K 1% 0,6W
3444	4822 116 52175	100R 5% 0,5W
3445	4822 051 30222	2,2K 5% 0,062W
3446	4822 117 12891	220K 1% ERJ3E
3447	4822 051 30103	10K 5% 0,062W
3448	4822 116 52243	1,5K 5% 0,5W
3449	4822 116 52257	22K 5% 0,5W
3450	4822 051 30103	10K 5% 0,062W
3451	4822 051 30471	470R 5% 0,062W
3452	4822 051 30103	10K 5% 0,062W
3453	4822 051 30102	1K 5% 0,062W

ELECTRICAL PARTSLIST - COMBI BOARD

- RESISTORS -

3454	4822 050 11002	1K 1% 0,4W
3455	4822 051 30102	1K 5% 0,062W
3456	4822 050 11002	1K 1% 0,4W
3457	4822 051 30103	10K 5% 0,062W
3458	4822 051 30102	1K 5% 0,062W
3459	4822 116 83872	220R 5% 0,5W
3460	4822 051 30471	470R 5% 0,062W
3461	4822 116 52283	4,7K 5% 0,5W
3462	4822 051 30472	4,7K 5% 0,062W
3463	4822 116 52283	4,7K 5% 0,5W
3464	4822 051 30472	4,7K 5% 0,062W
3465	4822 116 52283	4,7K 5% 0,5W
3466	4822 051 30472	4,7K 5% 0,062W
3467	4822 116 52256	2,2K 5% 0,5W
3468	4822 051 30222	2,2K 5% 0,062W
3469	4822 116 83883	470R 5% 0,5W
3470	4822 051 30272	2,7K 5% 0,062W
3471	4822 050 23303	33K 1% 0,6W
3472	4822 051 30474	470K 5% 0,062W
3473	4822 051 30472	4,7K 5% 0,062W
3474	4822 050 11002	1K 1% 0,4W
3475	4822 051 30331	330R 5% 0,062W
3476	4822 116 83883	470R 5% 0,5W
3477	4822 051 30471	470R 5% 0,062W
3478	4822 116 83883	470R 5% 0,5W
3479	4822 051 30471	470R 5% 0,062W
3480	4822 050 11002	1K 1% 0,4W
3481	4822 051 30471	470R 5% 0,062W
3482	4822 050 11002	1K 1% 0,4W
3483	4822 051 30153	15K 5% 0,062W
3484	4822 051 30103	10K 5% 0,062W
3485	4822 116 52276	3,9K 5% 0,5W
3486	4822 051 30101	100R 5% 0,062W
3487	4822 116 52276	3,9K 5% 0,5W
3488	4822 051 30101	100R 5% 0,062W
3489	4822 050 11002	1K 1% 0,4W
3490	4822 051 30102	1K 5% 0,062W
3491	4822 050 11002	1K 1% 0,4W
3492	4822 051 30102	1K 5% 0,062W
3493	4822 050 11002	1K 1% 0,4W
3494	4822 051 30102	1K 5% 0,062W
3496	4822 051 30154	150K 5% 0,062W
3497	4822 051 30103	10K 5% 0,062W
3500	4822 117 12968	820R 5% 0,62W
3501	4822 051 30471	470R 5% 0,062W
3502	4822 116 52256	2,2K 5% 0,5W
3503	4822 051 30471	470R 5% 0,062W
3505	4822 051 30333	33K 5% 0,062W
3506	4822 051 30333	33K 5% 0,062W
3507	4822 117 12971	15R 5% 0,62W

- RESISTORS -

3508	4822 117 12971	15R 5% 0,62W
3509	4822 051 30333	33K 5% 0,062W
3510	4822 051 30333	33K 5% 0,062W
3511	4822 117 13632	100K 1% 0,62W
3512	4822 117 13632	100K 1% 0,62W
3513	4822 051 30153	15K 5% 0,062W
3514	4822 051 30153	15K 5% 0,062W
3515	4822 051 30333	33K 5% 0,062W
3516	4822 051 30333	33K 5% 0,062W
3517	4822 117 13632	100K 1% 0,62W
3518	4822 117 13632	100K 1% 0,62W
3519	4822 117 12891	220K 1% ERJ3E
3520	4822 117 12891	220K 1% ERJ3E
3521	4822 050 23303	33K 1% 0,6W
3522	4822 050 23303	33K 1% 0,6W
3523	4822 050 23303	33K 1% 0,6W
3524	4822 050 23303	33K 1% 0,6W
3525	4822 117 12891	220K 1% ERJ3E
3526	4822 117 12891	220K 1% ERJ3E
3527	4822 117 12891	220K 1% ERJ3E
3528	4822 117 12891	220K 1% ERJ3E
3529	4822 116 52264	27K 5% 0,5W
3530	4822 116 52264	27K 5% 0,5W
3531	4822 116 52264	27K 5% 0,5W
3532	4822 116 52264	27K 5% 0,5W
3533	4822 051 30333	33K 5% 0,062W
3534	4822 051 30333	33K 5% 0,062W
3535	4822 117 13632	100K 1% 0,62W
3536	4822 117 13632	100K 1% 0,62W
3537	4822 117 12891	220K 1% ERJ3E
3538	4822 117 12891	220K 1% ERJ3E
3539	4822 051 30223	22K 5% 0,062W
3540	4822 051 30223	22K 5% 0,062W
3541	4822 051 30154	150K 5% 0,062W
3542	4822 051 30154	150K 5% 0,062W
3543	4822 117 12864	82K 5% 0,6W
3544	4822 117 12864	82K 5% 0,6W
3545	4822 117 12902	8,2K 1% 0,063W
3546	4822 117 12902	8,2K 1% 0,063W
3547	4822 051 30154	150K 5% 0,062W
3548	4822 051 30154	150K 5% 0,062W
3551	4822 051 30333	33K 5% 0,062W
3552	4822 051 30333	33K 5% 0,062W
3553	4822 117 12902	8,2K 1% 0,063W
3554	4822 117 12902	8,2K 1% 0,063W
3555	4822 051 30682	6,8K 5% 0,062W
3556	4822 051 30682	6,8K 5% 0,062W
3557	4822 051 30183	18K 5% 0,062W
3558	4822 051 30183	18K 5% 0,062W
3559	4822 051 30272	2,7K 5% 0,062W

ELECTRICAL PARTSLIST - COMBI BOARD

- RESISTORS -

3560	4822 051 30272	2,7K 5% 0,062W
3561	4822 050 21003	10K 1% 0,6W
3562	4822 050 21003	10K 1% 0,6W
3563	4822 051 30101	100R 5% 0,062W
3565	4822 051 20229	22R 5% 0,1W
3566	4822 051 20229	22R 5% 0,1W
3568	4822 051 10102	1K 2% 0,25W
3572	4822 051 30103	10K 5% 0,062W
3573	4822 050 11002	1K 1% 0,4W
3574	4822 117 12925	47K 1% 0,063W
3575	4822 051 30153	15K 5% 0,062W
3576	4822 051 30153	15K 5% 0,062W
3577	4822 051 30471	470R 5% 0,062W
3578	4822 051 30471	470R 5% 0,062W
3579	4822 051 30154	150K 5% 0,062W
3580	4822 051 30154	150K 5% 0,062W
3581	4822 051 30272	2,7K 5% 0,062W
3582	4822 051 30272	2,7K 5% 0,062W
3583	4822 051 30472	4,7K 5% 0,062W
3584	4822 051 30472	4,7K 5% 0,062W
3585	4822 051 30222	2,2K 5% 0,062W
3586	4822 051 30222	2,2K 5% 0,062W
3587	4822 051 30392	3,9K 5% 0,063W
3588	4822 051 30392	3,9K 5% 0,063W
3589	4822 116 83872	220R 5% 0,5W
3901	4822 051 20121	120R 5% 0,1W
3902	4822 051 20121	120R 5% 0,1W
3903	4822 051 20121	120R 5% 0,1W
3904	4822 051 20121	120R 5% 0,1W
4260	4822 051 10008	0R 5% 0,25W
4261	4822 051 10008	0R 5% 0,25W
4262	4822 051 30008	0R JUMPER
4263	4822 051 10008	0R 5% 0,25W
4264	4822 051 10008	0R 5% 0,25W
4265	4822 051 10008	0R 5% 0,25W
4266	4822 051 30008	0R JUMPER
4333	4822 051 30008	0R JUMPER
4334	4822 051 30008	0R JUMPER
4335	4822 051 30008	0R JUMPER
4401	4822 051 20008	0R JUMPER (0805)
4410	4822 051 10008	0R 5% 0,25W
4411	4822 051 20008	0R JUMPER (0805)
4412	4822 051 10008	0R 5% 0,25W
4413	4822 051 20008	0R JUMPER (0805)
4414	4822 051 10008	0R 5% 0,25W
4415	4822 051 20008	0R JUMPER (0805)
4416	4822 051 20008	0R JUMPER (0805)
4417	4822 051 20008	0R JUMPER (0805)
4418	4822 051 20008	0R JUMPER (0805)
4419	4822 051 10008	0R 5% 0,25W

- RESISTORS -

4510	4822 051 10008	0R 5% 0,25W
4513	4822 051 30008	0R JUMPER
4560	4822 051 10008	0R 5% 0,25W
4561	4822 051 30008	0R JUMPER
4562	4822 051 10008	0R 5% 0,25W
4563	4822 051 10008	0R 5% 0,25W
4564	4822 051 10008	0R 5% 0,25W
4565	4822 051 10008	0R 5% 0,25W
4566	4822 051 30008	0R JUMPER
4567	4822 051 10008	0R 5% 0,25W
4568	4822 051 30008	0R JUMPER
4569	4822 051 10008	0R 5% 0,25W
4570	4822 051 30008	0R JUMPER
4571	4822 051 10008	0R 5% 0,25W
4572	4822 051 30008	0R JUMPER
4573	4822 051 10008	0R 5% 0,25W

- COILS & FILTERS -

5331	4822 157 11837	0,36 H 10%
5332	4822 157 11837	0,36 H 10%
5333	4822 157 11837	0,36 H 10%
5334	4822 157 11837	0,36 H 10%
5400	3198 018 11580	FXDIND 1,5 H 5%
5401	3198 018 11580	FXDIND 1,5 H 5%
5402	2422 540 98518	8MHZ CSTS*MG03 A
5403	2422 543 01069	32KHZ768
5404	4822 242 11033	LN-G102-38 4,332MH
5550	4822 157 10686	CHOKE COIL 0,47 F
5551	4822 157 10686	CHOKE COIL 0,47 F
5553	2422 549 44607	EMI100MHZ600RR
5554	2422 549 44607	EMI100MHZ600RR
5555	2422 549 44607	EMI100MHZ600RR
5556	2422 549 44607	EMI100MHZ600RR
5557	2422 549 44607	EMI100MHZ600RR
5558	2422 549 44607	EMI100MHZ600RR
5559	2422 549 44607	EMI100MHZ600RR
5560	2422 549 44607	EMI100MHZ600RR
5561	2422 549 44607	EMI100MHZ600RR
5562	2422 549 44607	EMI100MHZ600RR
5563	2422 549 44607	EMI100MHZ600RR
5564	2422 549 44607	EMI100MHZ600RR

- DIODES -

6254	4822 130 31878	1N4003G
6255	4822 130 31878	1N4003G
6256	4822 130 31878	1N4003G
6257	4822 130 31878	1N4003G
6258	4822 130 31878	1N4003G

ELECTRICAL PARTSLIST - COMBI BOARD

- DIODES -

6259	4822 130 31878	1N4003G
6260	4822 130 31878	1N4003G
6261	4822 130 31878	1N4003G
6262	4822 130 31878	1N4003G
6263	4822 130 31878	1N4003G
6264	4822 130 31878	1N4003G
6265	4822 130 31878	1N4003G
6266	4822 130 30621	1N4148
6267	4822 130 30621	1N4148
6268	4822 130 34382	BZX79-B8V2
6271	4822 130 34278	BZX79-B6V8
6272	4822 130 61219	BZX79-B10
6275	3198 010 53380	BZX79-B3V3
6331	4822 130 30621	1N4148
6332	4822 130 30621	1N4148
6333	4822 130 30621	1N4148
6400	4822 130 30621	1N4148
6401	4822 130 30621	1N4148
6500	4822 130 30621	1N4148
6550	3198 010 53380	BZX79-B3V3
6901	9322 033 20682	TLHG4405
6902	9322 033 20682	TLHG4405
6903	9322 033 20682	TLHG4405
6904	9322 033 20682	TLHG4405
6905	9322 033 20682	TLHG4405
6906	9322 033 20682	TLHG4405
6907	9322 033 20682	TLHG4405
6908	9322 033 20682	TLHG4405
6909	9322 033 20682	TLHG4405
6910	9322 033 20682	TLHG4405
6911	9322 033 20682	TLHG4405
6912	9322 033 20682	TLHG4405

- IC & TRANSISTORS -

7250	9322 139 24687	BDW94CFP
7251	5322 130 60159	BC846B
7252	5322 130 60159	BC846B
7253	5322 130 44647	BC368
7254	5322 130 44593	BC369
7255	5322 130 60159	BC846B
7256	4822 130 41246	BC327-25
7257	4822 130 41246	BC327-25
7258	4822 130 41246	BC327-25
7259	5322 130 60159	BC846B
7260	5322 130 60845	BC807-25
7261	5322 130 60159	BC846B
7330	9322 133 18682	AN7125P
7331	4822 130 60373	BC856B
7332	4822 130 60373	BC856B

- IC & TRANSISTORS -

7333	5322 130 60159	BC846B
7400	3140 110 51200	TMP87CP23F/MC20
7402	5322 130 60159	BC846B
7403	5322 130 60159	BC846B
7404	9322 155 82667	TSOP2236
7405	9322 140 83682	M24C01-BN6
7406	4822 209 31981	SAA6579T
7500	4822 209 10264	HEF4069UBP
7501	4822 130 44568	BC557B
7502	4822 130 44568	BC557B
7503	4822 130 44568	BC557B
7504	4822 130 44568	BC557B
7505	5322 130 60159	BC846B
7506	5322 130 60159	BC846B
7507	5322 130 60159	BC846B
7508	5322 130 60159	BC846B
7509	5322 130 60159	BC846B
7510	5322 130 60159	BC846B
7511	5322 130 60159	BC846B
7512	5322 130 60159	BC846B
7513	5322 130 60159	BC846B
7514	5322 130 60159	BC846B
7550	4822 130 42804	BC817-25
7551	4822 209 10263	HEF4052BP
7552	5322 209 10421	HEF4094BP
7553	4822 130 41327	BC327-40
7555	5322 130 60159	BC846B
7556	5322 130 60159	BC846B

Note: Only these parts mentioned in the list are normal service parts.